Drop-in Circulator, 1000-1120MHz	
ELECTRICAL SPECIFICATION	
Product Model:	VDC-1011-1
Frequency Range (MHz):	1000-1120
Isolation (dB) min:	23
Insertion Loss (dB) max:	0.2dB (Typ); 0.3dB(Max)
VSWR max:	1.15:1
Power (Ave) :	50 W (Avg); 4.5 KW (Peak: 14 DUTY CYCLE)
HARMONICS AND SPURIOUS SIGNAL	
2nd HARMONIC :	-60 dBc (Goal)
3rd HARMONIC :	-80 dBc (Goal)
ALL OTHER HARMONIC :	-100 dBc (Goal)
AND SPURIOUS	
ENVIRONMENTAL SPECS	
OPER. TEMP. RANGE (℃) :	-40 TO +85
ALTITUDE :	25000 Feet
SHOCK :	6g, 11mSec>, 1/2 Sine
VIBRATION :	RANDOM gmrsm 2.97 FROM 10 TO 2000Hz
HUMIDITY :	OPERATING COND, 85% RH WITHOUT CONDENSATION NON OPERATING COND. 100% RH WITH CONDENSATION
CASE :	MAGNETIC SHIELDING

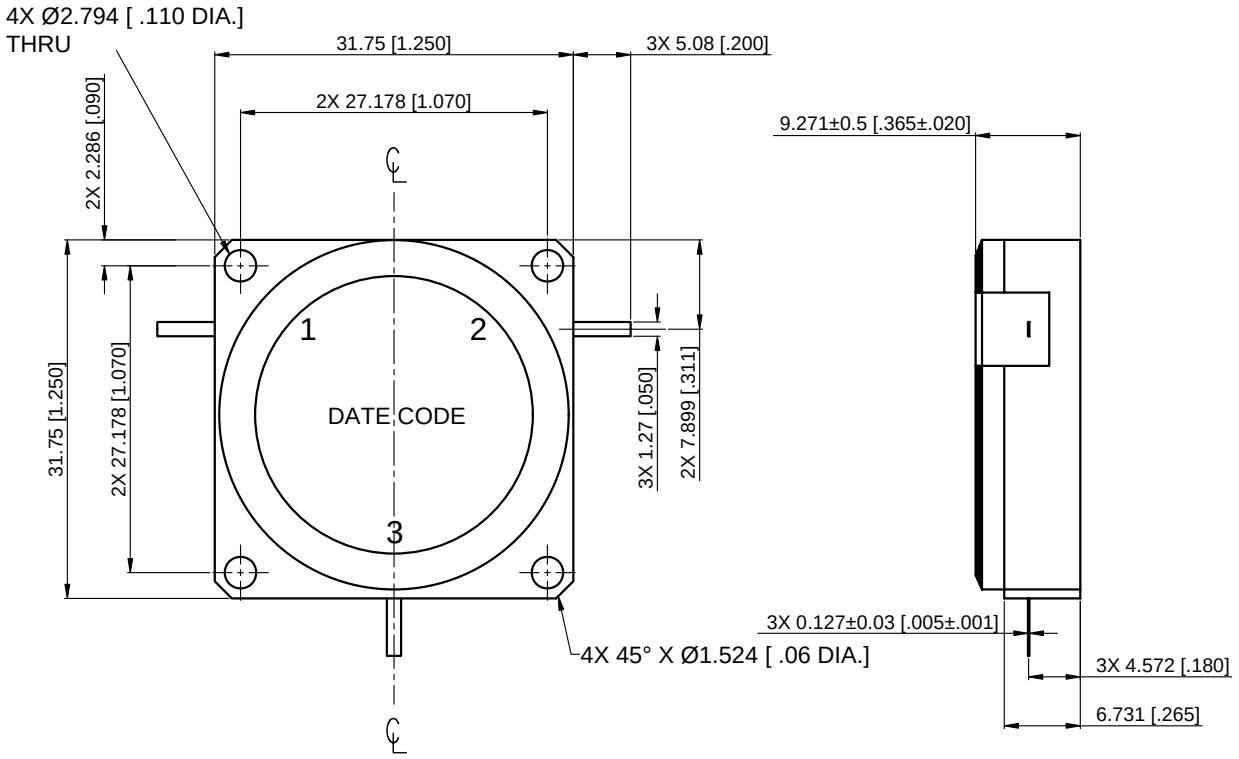

Description	Ecn.No	Date	Rev

Drawn:	03/15/12
Checked:	03/15/12
Approved:	03/15/12

Title: Drop-in Circulator

vidaRF
Tel:877-777-8432
www.vidaRF.com

Unless otherwise specified dimensions are in millimeters, dimensions in [ ] are in inches for customer reference only.
Unless Otherwise Specified tolerance are:

.XX	±0.13 [.005"]
.X	±0.20 [.008"]
X	±0.50 [.019"]
.X°	±1°
X°	±2°

Cage Code 6KQ83

View:

Part No: VDC-1011-1

Size:	Scale:	Sheet:	Rev:
A4	1.5:1	1/1	A