THIS DRAWING IS PROPRIETARY AND CONFIDENTIAL.

REV	DESCRIPTION	DATE	BY	APPVD	CHKD
1	PRELIMINARY RELEASE, RDCR 127010	9/14/2012	PLM	RS	MJR
2	REVISE VSWR RANGE	1/29/2014	MJM	MJR	MJR

MECHANICAL CHARACTERISTICS

INTERFACE	MIL-STD-348, FIGURE 323.1
RECOMMENDED MATING TORQUE	9 IN-LBS. NOM.
COUPLING PROOF TORQUE	15 IN-LBS MIN.
COUPLING NUT RETENTION	60 LBS. MIN.
FORCE TO ENGAGE	2 IN-LBS. MAX.
FORCE TO DISENGAGE	2 IN-LBS. MIN.
DURABILITY	500 CYCLES MIN.
AXIAL CONTACT RETENTION (FROM INTERFACE)	6 LBS. MIN.
AXIAL CONTACT RETENTION (FROM CABLE)	6 LBS. MIN.
CABLE RETENTION	10 LBS. MIN.
MASS	7.04 GRAMS

ELECTRICAL CHARACTERISTICS

IMPEDANCE	50 Ohms NOM.
MAXIMUM FREQUENCY	32 GHz
VSWR DC - 3 GHz	1.1:1 MAX.
3 - 8 GHz	1.14:1 MAX.
8 - 12.4 GHz	1.15:1 MAX.
12.4 - 18 GHz	1.16:1 MAX.
18 - 28 GHz	1.16:1 MAX.
28 - 32 GHz	1.16:1 MAX.
INSERTION LOSS	0.04 √F (GHz)dB MAX.
DIELECTRIC WITHSTANDING VOLTAGE	950 Vrms MIN.
INSULATION RESISTANCE	5000 MegaOhms MIN.
RF LEAKAGE DC - 18 GHz	-90 dB MIN.
CORONA	250 Vrms MIN. @ 70,000 FEET
RF HIGH POTENTIAL	625 Vrms MIN.
CONTACT RESISTANCE (INNER)	3.0 MilliOhms MAX.
CONTACT RESISTANCE (OUTER)	2.0 MilliOhms MAX.

ENVIRONMENTAL CHARACTERISTICS

OPERATING TEMPERATURE	-100°C TO 150°C
VIBRATION	MIL-STD-202, METHOD 204, CONDITION D
MECHANICAL SHOCK	MIL-STD-202, METHOD 213, CONDITION I
THERMAL SHOCK	MIL-STD-202, METHOD 107, CONDITION B
CORROSION	MIL-STD-202, METHOD 101, CONDITION B, 5%

MATERIALS AND FINISH

COUPLING NUT	STEEL, CORROSION RESISTANT, PER ASTM-A-582, UNS NO. S30300, PASSIVATED PER ASTM-A-967
MAIN BODY, SLEEVE(S)	STEEL, CORROSION RESISTANT, PER ASTM-A-582, UNS NO. S30300, PASSIVATED PER SAE-AMS-2700
SNAP RING	BERYLLIUM COPPER, PER ASTM-B-197
CONTACT(S), REAR BODY	BERYLLIUM COPPER, ASTM-B-196 GOLD PLATED PER MIL-DTL-45204, OVER NICKEL PLATE PER AMS-QQ-N-290
DIELECTRIC BEAD(S)	POLYETHERIMIDE THERMOPLASTIC, PER ASTM-D-5205
DIELECTRIC STOP	TFE FLUOROCARBON PER ASTM-D-1710

APPLICATION

CABLE(S)	MCJ185A CABLE
INSTALLATION	PER CONFIGURATOR

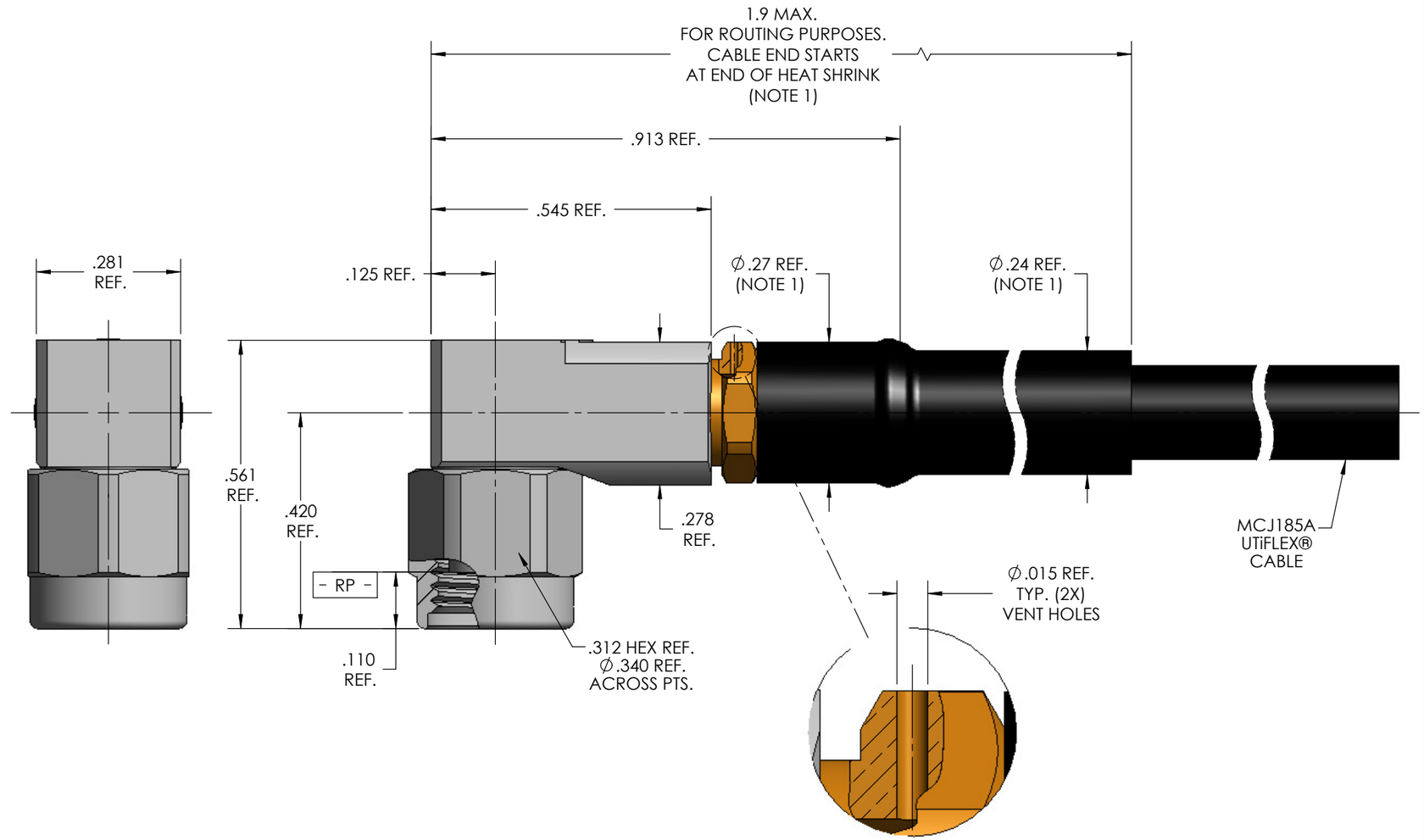

NOTE:

1. MARKER LOCATION ON THIS DRAWING IS FOR REFERENCE ONLY AND IS SUBJECT TO CHANGE WITHOUT NOTICE.
2. ALL SPECIFICATIONS LISTED ON THIS DRAWING WILL ALSO APPLY TO CONNECTOR 905232-EM (EQUIPMENT MODEL).

SPECIFICATION DRAWING

THIS SPECIFICATION IS THE PROPERTY OF MICRO-COAX, INC. AND MAY NOT BE USED OR COPIED WITHOUT THE EXPRESS WRITTEN PERMISSION OF MICRO-COAX, INC.

	INITIALS	DATE
DWN.	PLM	09/10/12
CHKD.	MJR	09/10/12
APPVD.		

MICRO-COAX®
Leading the way in transmission line solutions.
Copyright Micro-Coax, Inc.

TOLERANCES UNLESS OTHEWISE SPECIFIED	
.XX	± .02
.XXX	± .005
.XXXX	± .0010
ANGLES	±2°

TITLE: 2.92mm(K) RIGHT ANGLE PLUG, VENT HOLE, MCJ185A, SPACE GRADE

ALL DIMENSIONS IN INCHES UNLESS OTHERWISE SPECIFIED. SCREW THDS. TO BE IN ACCORD WITH ANSI B1.1-1989.

FSCM NO.	SIZE	SCALE	SHEET NO.	DRAWING NO.	REV
64639	B	4:1	1 OF 1	SD905232	2