No.	Revision	Date	Name
△			
△			

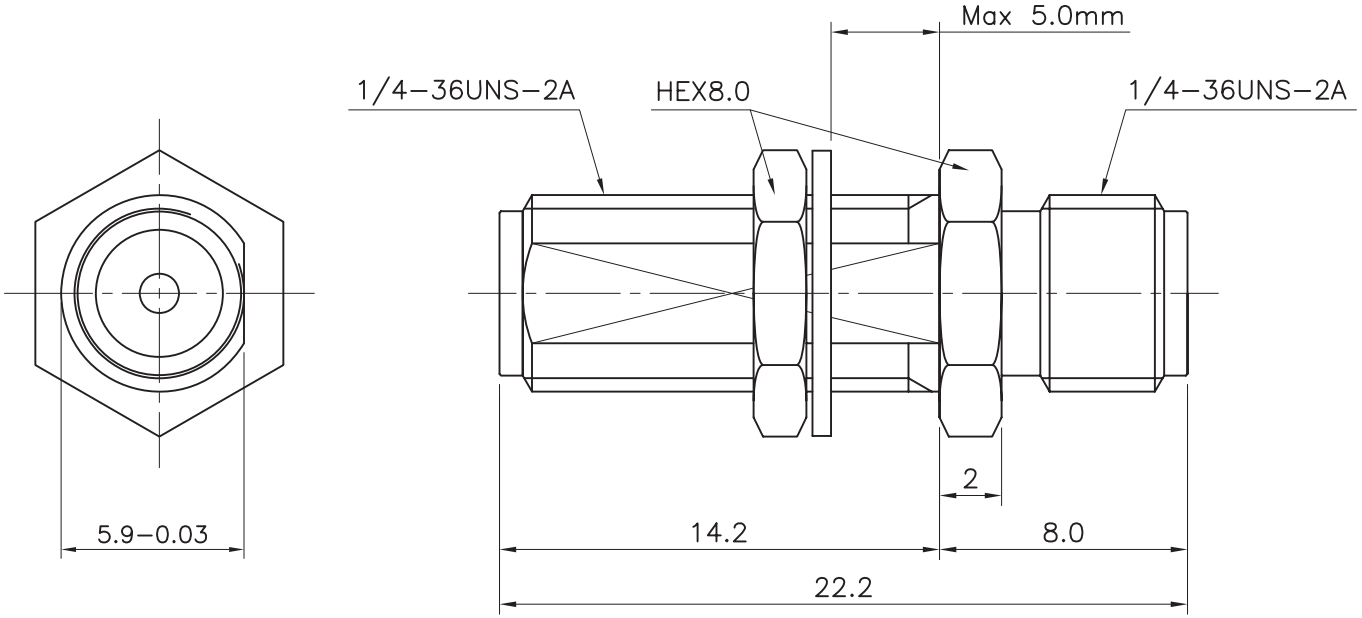

SMA Bulkhead JACK TO JACK
-ADAPTOR

Connector parts	Materials	Finish
Body	Brass	Gold Plated
Center contact	Be-Cu	Gold Plated
Insulator	PTFE	-

NO.	DESCRIPTION	Q'TY	MATERIAL	FINISH	REMARKS.

PARTS No. 1S-804-00	NAME SMA/BJ-TO JACK-ADAPTOR	APPROVED
MATERIAL / FINISH	TOLERANCES OTHERWISE SPEC. ±0.05 ANGLES ±1°	CHECKED
	SCALE N/S / UNIT mm	DESIGNED S.J.LEE
CUSTOMER	DWG NO. 1S-804-00	DATE. 15/DEC/2008

Cross RF
web: www.crossrf.com