WR12 WAVEGUIDE STANDARD GAIN HORN ANTENNA – RW12HORN24A

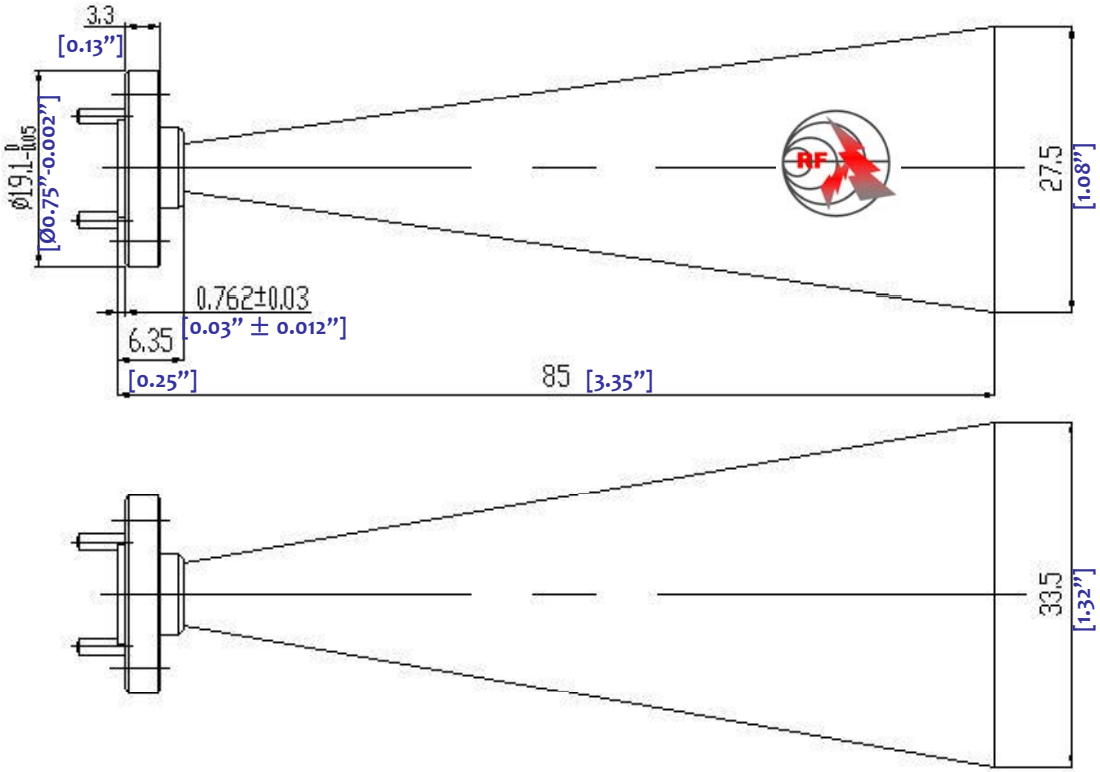

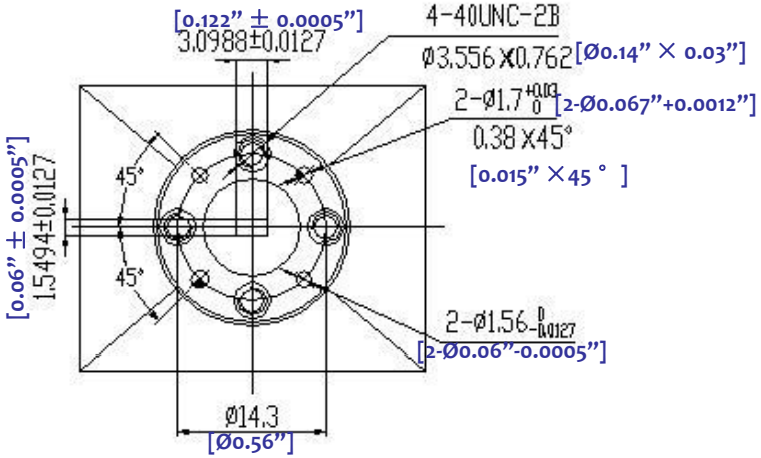

3.0	Electrical Specifications	
3.1	Frequency Range	60.5~91.9GHz
3.2	Gain	24.7dB
3.3	VSWR	1.2:1 (max)

1.0	Mechanical Specifications	
1.1	Waveguide type	Rectangular Waveguide **WR12**
1.2	Flange type	CPRF, COVER
1.3	Flange Holes	Through
1.4	Basis-material	Brass
1.5	Internal Body Finish	Silver Plated chromate or conversion
1.6	External Body Finish	Body painted with gray/black epoxy enamel

2.0	Environment specifications	
2.1	Operation Temp.	-40°C~+70°C
2.2	Storage Temp.	-50°C~+125°C
2.3	Altitude	45000 ft
2.4	Vibration	10g rms (15 degree 2KHz)
2.5	Humidity	100% RH at 35c, 95%RH at 40 deg c
2.6	Shock	20G for 11msc

PAGE 1 OF 1	DATE Jun 21th 2006
PROPRIETARY INFORMATION THE INFORMATION CONTAINED IN THIS DOCUMENT IS THE PROPERTY OF RF-LAMBDA EXCEPT AS SPECIFICALLY AUTHORIZED IN WRUTUBG BT RF-LAMBDA. THE HOLDER OF THIS DOCUMENT SHALL KEEP ALL INFORMATION CONTAINED HEREIN CONFIDENTIAL AND SHALL PROTECT SAME IN THE WHOLE OR IN PART FROM DISCLOSURE AND DISSEMINATION OF ALL THIRD PARTIES AND SHALL USE SAME FOR OPERATING AND MAINTENANCE PURPOSES ONLY	DESIGN RFPC RF-LAMBDA RFPC
RW12HORN24A WAVEGUIDE HORN ANTENNA	CAD MODEL REVISION 11 ASSEMBLY REVISION VS5DS ASSEMBLY NAME RFLVR05
www.rflambda.com	DRAWING NUMBER D05-1
RF-LAMBDA	SIZE LT SHEETS 1 OF 1