REVISIONS				
ZONE	REV	DESCRIPTION	Date	APPROVED

MECHANICAL

CONTACT: BREAK BEFORE MAKE
ACTUATOR: FAILSAFE
SWITCHING SPEED: 20 mSEC MAX

ELECTRICAL

ACTUATOR VOLTAGE: 28.0 Vdc
ACTUATOR CURRENT: 0.100 A MAX @ 28.0 Vdc
POWER HANDLING: 200W CW @ 1.0 GHz

ENVIRONMENTAL

OPERATING TEMP: −54° C TO +90° C
SINE VIBRATION: 30 G'S rms
LIFE: 1,000,000 CYCLES
RANDOM VIBRATION: 20 G'S rms

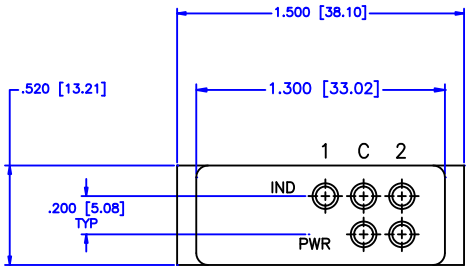

SPECIFICATION:

FREQUENCY RANGE (GHz):	DC−2.0	2.0−4.0	4.0−8.0	8.0−12.4	12.4−18.0	18.0−26.5
VSWR (Max.):	1.20:1	1.25:1	1.30:1	1.40:1	1.50:1	1.60:1
INSERTION LOSS (dB):	0.20	0.25	0.30	0.40	0.50	0.70
ISOLATION (dB):	90	80	80	70	60	50
IMPEDANCE (Ohms):	50					

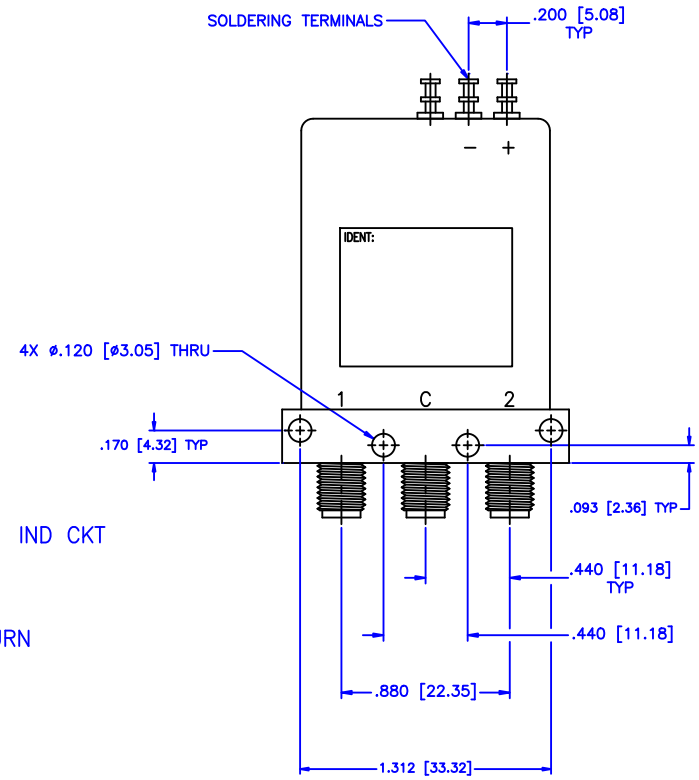

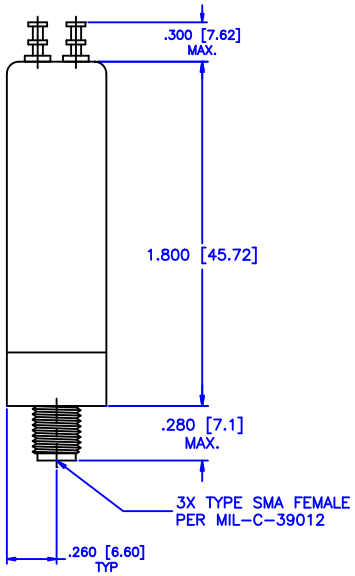

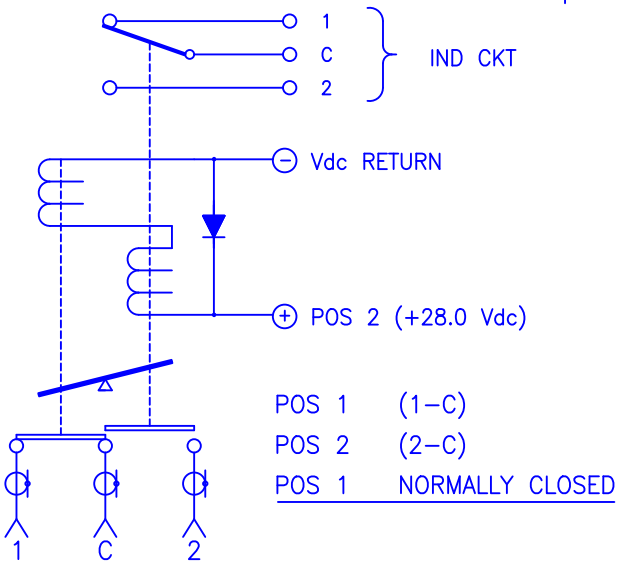

POS 1 (1−C)
POS 2 (2−C)
POS 1 NORMALLY CLOSED

MATERIAL:

MCLI
MICROWAVE COMMUNICATIONS LABORATORIES INC.
7255 30TH AVE. N. SAINT PETERSBURG, FL 33710
TEL: (727) 344−6254 FAX: (727) 381−6116
hhtp://WWW.MCLI.COM

SCALE: N/A
SHEET: N/A

UNLESS OTHERWISE SPECIFIED:
TOLERANCES
IN (INCHES) OR [mm] (MILLIMETERS)
FRACTIONS: ± 1/64
DECIMALS: ±.01 ±.005
ANGLE: ±1/2°

DRAWING TITLE: ELECTROMECHANICAL SWITCHES

PART NO. K3−8−FIS

DRAWN: Paiboon Luekhamhan DATE: 03−04−2001

APPROVED: T. Nguyen DATE: 03−04−2001

PROPRIETARY NOTICE:
THE INFORMATION IN THIS DRAWING IS PROPRIETARY AND SHALL NOT BE USED OR DISCLOSED WITHOUT WRITTEN PERMISSION FROM MICROWAVE COMMUNICATIONS LABORATORIES INC. (MCLI)

THIRD ANGLE PROJECTION

CAGE CODE: 0D2L5
SIZE: A
REV: N/A
DO NOT SCALE THE DRAWING
DWG NO. 82190