MATERIALS AND FINISHES:

BODY, JAM NUT, LOCKWASHER BRASS PLATED GOLD

CENTER CONTACT BERYLLIUM COPPER PLATED GOLD

INSULATOR TEFLON

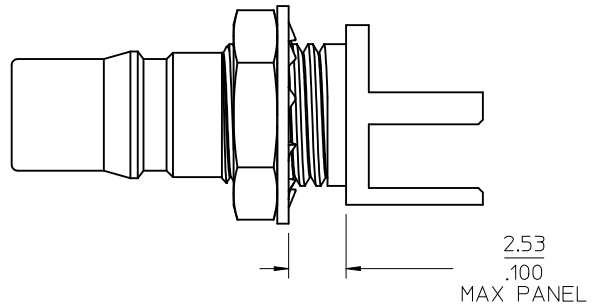

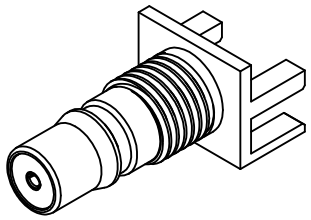

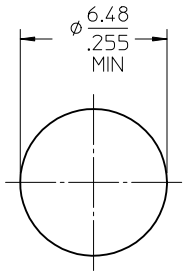

RECOMMENDED PANEL CUTOUT

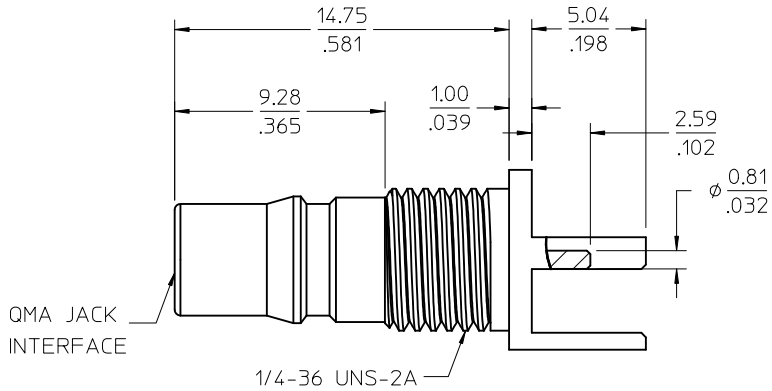

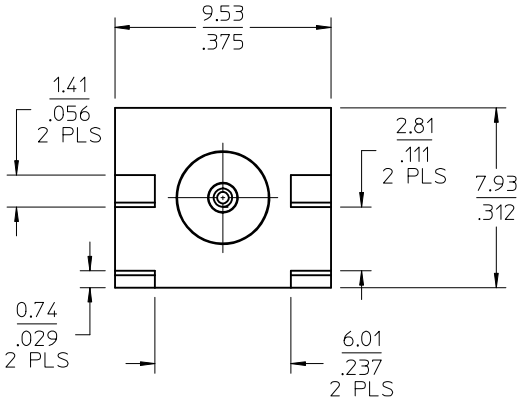

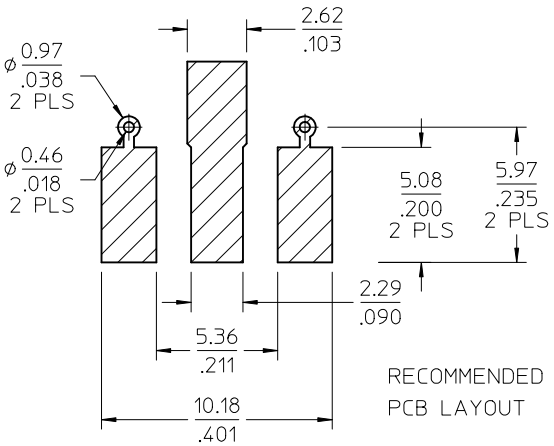

RECOMMENDED PCB LAYOUT

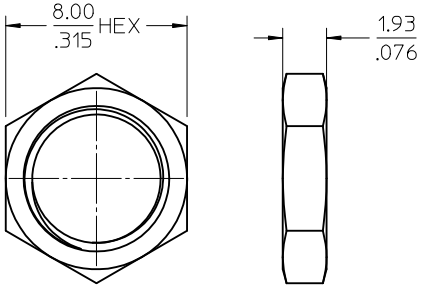

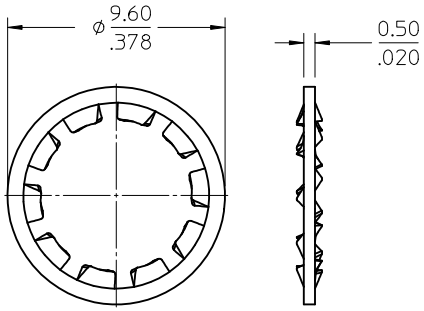

PART # 73254-0460

CHG: NEW RELEASE	EC NO: URF2012-0439	2011/02/24	A
LOCKWASHER WAS PHOSPOR BRONZE	DRWN:SSHAH	2011/01/30	
ADDED PCB LAYOUT	CH'KD:AROBERTSON	2012/01/31	
	APPR: JWIENER		
DESCRIPTION			REV

QUALITY SYMBOLS: ▼=0 ▽(C)=0

GENERAL TOLERANCES (UNLESS SPECIFIED)

	mm	INCH
4 PLACES	± ---	± ---
3 PLACES	± ---	± ---
2 PLACES	± ---	± ---
1 PLACE	± ---	± ---
ANGULAR ± 2 °		

DRAFT WHERE APPLICABLE MUST REMAIN WITHIN DIMENSIONS

DIMENSION STYLE: MM/IN

SCALE

DESIGN UNITS: METRIC

THIRD ANGLE PROJECTION

DRAWN BY	SSHAH	DATE 2011/01/12
CHECKED BY	AROBERTSON	DATE 2012/01/30
APPROVED BY	JWIENER	DATE 2012/01/31

TITLE: QMA JACK BLKHD EDGEMOUNT 50 OHMS EWR-4591 QMA-J/PCB

molex MOLEX INCORPORATED

MATERIAL NO. 732540460

DOCUMENT NO. SD-73254-046

SHEET NO. 1 OF 1

SIZE C

THIS DRAWING CONTAINS INFORMATION THAT IS PROPRIETARY TO MOLEX INCORPORATED AND SHOULD NOT BE USED WITHOUT WRITTEN PERMISSION