REV.	DESCRIPTION	DATE	BY	APPVD	CHKD
A	INITIAL RELEASE	02/28/05	SRS	RDS	-
A1	ECO 65239	8/3/2006	JMK	RS	-
B	ECO 85284	7/22/2008	PLM	JM	-
B1	ECO 105285	04/15/2010	PLM	RS	MJR
C	ECO 115609	10/7/2011	MJM	RS	MJR
D	ECO 125480	9/7/2012	MJM	RS	CCF

MECHANICAL CHARACTERISTICS

INTERFACE	MIL-STD-348A, NOTICE 3, FIGURE 304-1
SLANT SHEET	MIL-PRF-39012/1
RECOMMENDED MATING TORQUE	20 IN-LBS. NOM.
COUPLING PROOF TORQUE	25 IN-LBS. MIN.
COUPLING NUT RETENTION	100 LBS. MIN.
FORCE TO ENGAGE	6 IN-LBS. MAX.
FORCE TO DISENGAGE	6 IN-LBS. MAX.
DURABILITY	500 CYCLES MIN.
AXIAL CONTACT RETENTION (FROM INTERFACE)	6 LBS. MIN.
AXIAL CONTACT RETENTION (FROM CABLE)	6 LBS. MIN.
CABLE RETENTION	20 LBS. MIN.
MASS	38.33 GRAMS NOM.

ELECTRICAL CHARACTERISTICS

IMPEDANCE	50 Ohms NOM.
MAXIMUM FREQUENCY	12.4 GHz
VSWR DC - 12.4 GHz	1.16:1MAX.
INSERTION LOSS	0.045 $\sqrt{F}$ (GHz) dB MAX.
DIELECTRIC WITHSTANDING VOLTAGE	1675 Vrms MIN.
INSULATION RESISTANCE	5000 MegaOhms MIN.
RF LEAKAGE DC - 12.4 GHz	-90 dB MIN.
CORONA	430 Vrms. MIN. @ 70,000 FT.
RF HIGH POTENTIAL	1125 Vrms. MIN.
CONTACT RESISTANCE (INNER)	1.0 MilliOhms MAX.
CONTACT RESISTANCE (OUTER)	0.2 MilliOhms MAX.

ENVIRONMENTAL CHARACTERISTICS

OPERATING TEMPERATURE	-62°C TO 165°C
VIBRATION	MIL-STD-202, METHOD 204, CONDITION B
MECHANICAL SHOCK	MIL-STD-202, METHOD 213, CONDITION I
THERMAL SHOCK	MIL-STD-202, METHOD 107, CONDITION B
MOISTURE RESISTANCE	MIL-STD-202, METHOD 106, CONDITION (NO VIBRATION)
CORROSION	MIL-STD-202, METHOD 101, CONDITION B, 5%

MATERIALS AND FINISH

CONTACT	BERYLLIUM COPPER PER ASTM-B-196, GOLD PLATE PER MIL-DTL- 45204, OVER NICKEL PLATE PER QQ-N-290.
FORWARD BEAD	POLYPHENYLENE SULFIDE (PPS), PER ASTM-D-6358
BODY, SLEEVE, CLAMP NUT, & COUPLING NUT	STEEL, CORROSION RESISTANT, PER ASTM-A-582, UNS NO. S30300, PASSIVATE PER ASTM-A-967 OR SAE- AMS-2700
SNAP RING	BERYLLIUM COPPER, PER ASTM-B-197
GASKET	SILICONE RUBBER PER ZZ-R-765
CONTACT RING	BRASS, PER ASTM-B-16, GOLD PLATE PER MIL-DTL-45204, OVER NICKEL PLATE PER QQ-N-290
FORWARD INSULATOR	TFE FLUOROCARBON, PER ASTM-D-1710

APPLICATION

CABLE(S)	311 SERIES CABLE
INSTALLATION	PER CONFIGURATOR

THIS DRAWING IS PROPRIETARY AND CONFIDENTIAL.

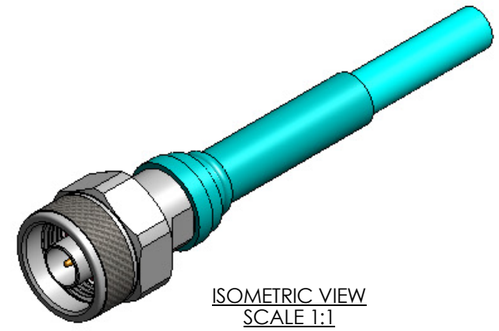

ISOMETRIC VIEW
SCALE 1:1

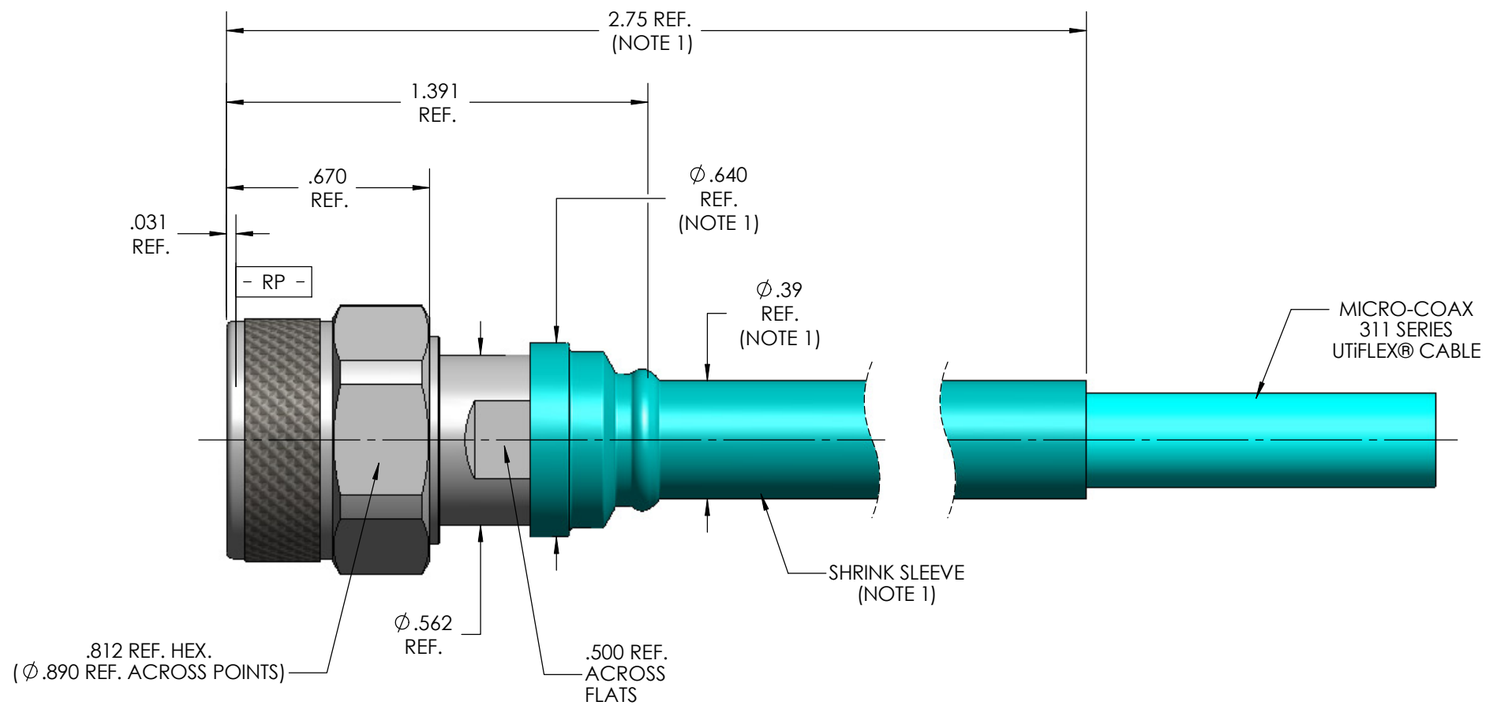

NOTE(S)

1. MARKER LOCATION ON THIS DRAWING IS FOR REFERENCE ONLY AND IS SUBJECT TO CHANGE WITHOUT NOTICE.

SPECIFICATION DRAWING

THIS SPECIFICATION IS THE PROPERTY OF MICRO-COAX, INC. AND MAY NOT BE USED OR COPIED WITHOUT THE EXPRESS WRITTEN PERMISSION OF MICRO-COAX, INC.

	INITIALS	DATE
DWN.	SRS	08/04/04
CHKD.	CCF	10/11/11
APPVD.		

MICRO-COAX®
Leading the way in transmission line solutions.
Copyright Micro-Coax, Inc.

TOLERANCES UNLESS OTHEWISE SPECIFIED	
.XX	± .02
.XXX	± .005
.XXXX	± .0010
ANGLES	± 2°

TITLE: N PLUG, 311 SERIES

ALL DIMENSIONS IN INCHES UNLESS OTHERWISE SPECIFIED. SCREW THDS. TO BE IN ACCORD WITH ANSI B1.1-1989.

FSCM NO.	SIZE	SCALE	SHEET NO.	DRAWING NO.	REV
64639	B	2:1	1 OF 1	SD904104	D