REVISIONS				
ZONE	REV.	DESCRIPTION	DATE	APPROVED
	A	ORIGINAL RELEASE	6/11/10	

Description:

Part Number 27313220 (Model Number PS-5G18G-400-A-SFF) is a 5 - 18 GHz Analog Phase Shifter. This phase shifter is supplied in our standard PE2 housing that can be used as a SMA connectorized or a surface mount component.

This model provides the following performance. Data is available upon request.

Specifications:

Frequency Range:	5 to 18 GHz
Phase Shift Range:	
5 - 10 GHz	180° Min, 400° Typ
10 - 13 GHz	135° Min, 200° Typ
13 - 18 GHz	45° Min, 120° Typ
Insertion Loss:	
5 - 10 GHz	12 dB Max, 8 dB Typ
10 - 18 GHz	7 dB Max, 4 dB Typ
Return Loss (In/Out):	8 dB Typ
Control Voltage Range:	0 - 10 VDC
Modulation Bandwidth:	50 MHz Typ
Phase Voltage Sensitivity:	40° / V Typ
Insertion Phase Temp Sensitivity:	0.5° / V Typ

Absolute Maximum Ratings:

Control Voltage:	+11 VDC
Reverse Current:	5 mA
Input Power:	+30 dBm CW

Available Options:

Various Package types
Various Connector types
Hermetic Sealing
MIL-STD-883 Screening Available

Environmental Ratings:

Temperature:	-55 to +85 Deg. C (Operating)
	-65 to +150 Deg. C (Storage)
Humidity:	MIL-STD-202F, METHOD 103B COND B.
Shock:	MIL-STD-202F, METHOD 213B COND B.
Altitude:	MIL-STD-202F, METHOD 105C COND B.
Temperature Cycle:	MIL-STD-202F, METHOD 107D COND A

Note: The above specifications are subject to change or revision.

PE2 HOUSING WITH CARRIER

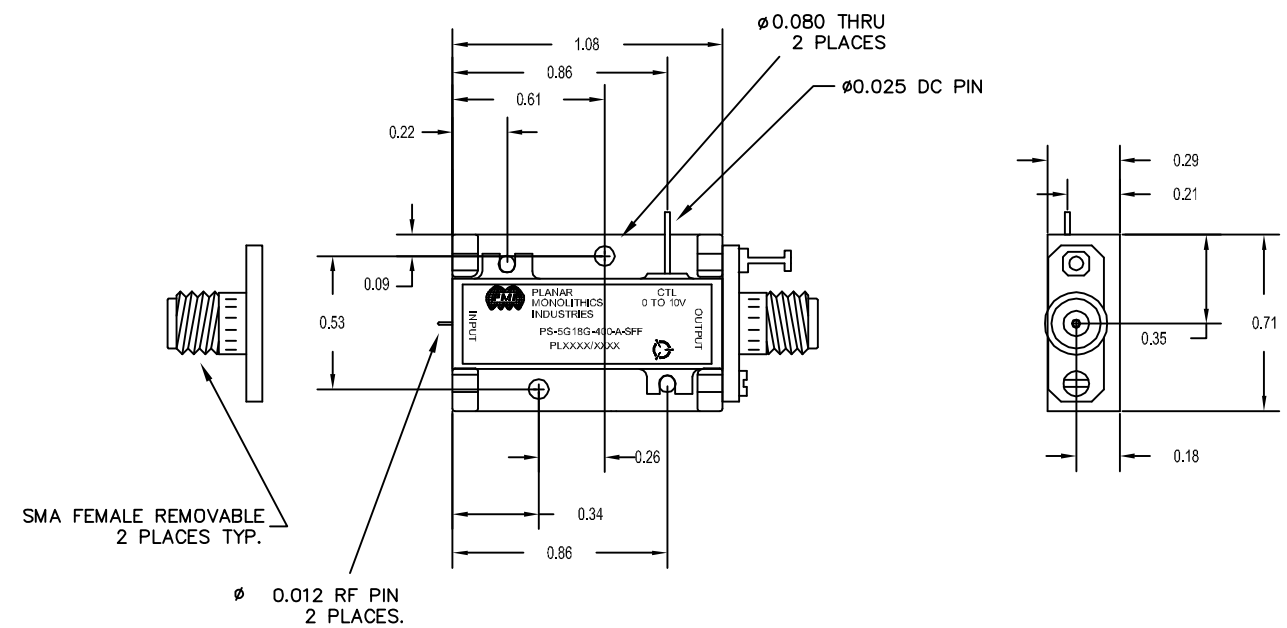

PE2 HOUSING WITHOUT CARRIER (SURFACE MOUNT)

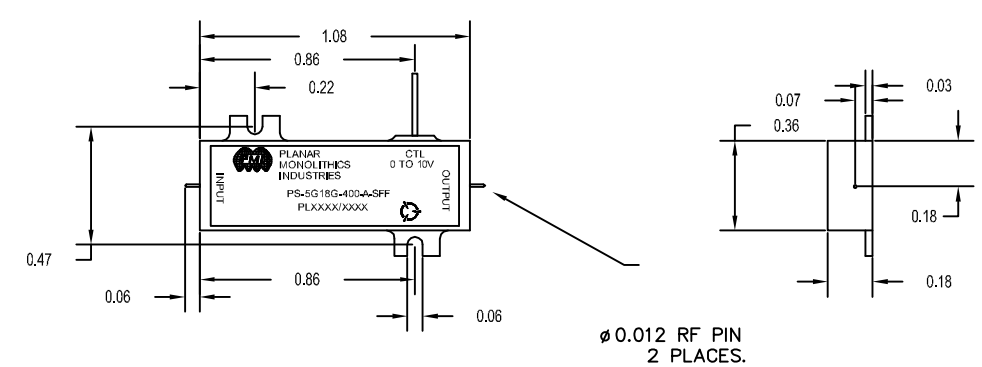

UNLESS OTHERWISE SPECIFIED
DIMENSIONS ARE IN INCHES
TOLERANCES ARE:
FRACTIONS ± DECIMALS .XX ± 0.010 .XXX ± 0.005 ANGLES ±

MATERIAL: 6061-T6 Aluminum
FINISH: GOLD PLATED
DO NOT SCALE DRAWING

PART NO.		
APPROVALS	DATE	
DRAWN DPD	6/11/10	
CHECKED		
ISSUED		

PMI 7311-F GROVE ROAD FREDERICK, MARYLAND

TITLE OUTLINE DRAWING PS-5G18G-400-A-SFF

SIZE	CAGE CODE	DWG NO.	REV.
B	05XQ0	27013221	A

SCALE N/A SHEET 1 OF 1