SECURITY CLASSIFICATION

SERVICE DRAWING NUMBER

USED ON

3RD ANGLE PROJECTION

DRAWING TO BE READ IN CONJUNCTION WITH BS 308

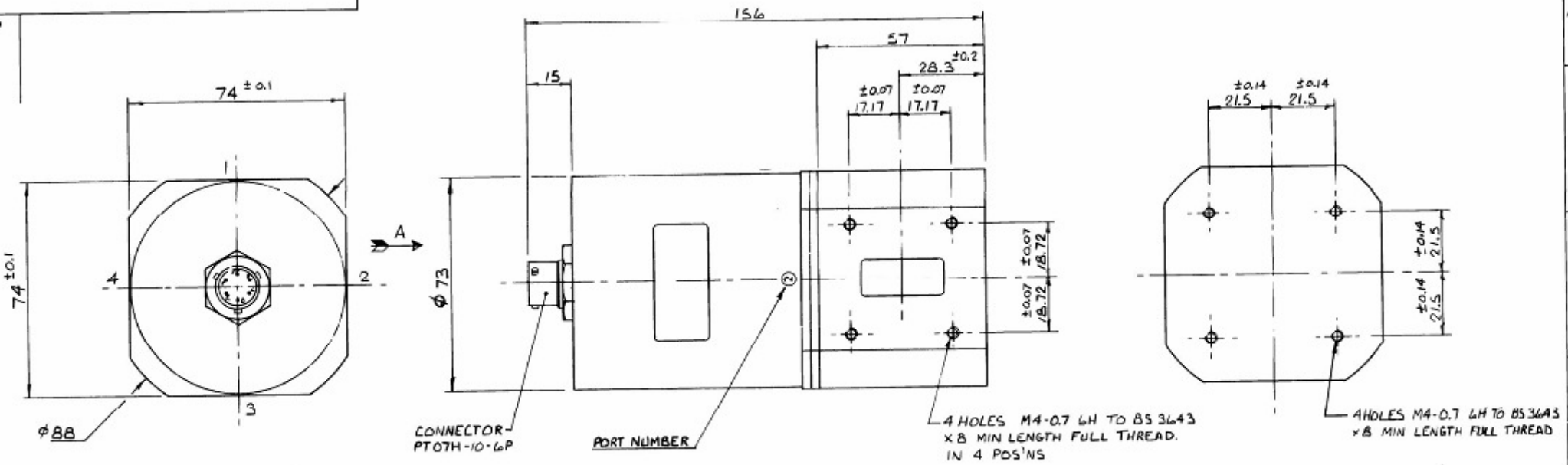

SPECIFICATION

FREQUENCY RANGE	7.05 - 10 GHZ
ISOLATION	90 dB MIN
INSERTION LOSS	0.1 dB MAX
V.S.W.R.	1.05:1 MAX
POWER RATING	350KW PEAK (UNPRESSURISED)
OPERATION	FAIL SAFE
SUPPLY	28V D.C. ±10%
SUPPLY CURRENT PULL IN	1.3A NOM AT 25°C
SUPPLY CURRENT HOLD	700 mA MAX
SWITCHING SPEED	160 ms MAX
TEMP. RANGE	-40°C TO +85°C
MATING FLANGE	UBR 84
PRESSURE	2 ATO
WEIGHT	1.5 Kg.

SHOCK & VIBRATION SPEC:-

SHOCK: (a) 35g, 3 PLANES SURVIVAL
(b) 15g, 3 PLANES OPERATIONAL

VIBRATION: 2 Hz 0.25 mm DISPLACEMENT
33 Hz 1 mm DISPLACEMENT

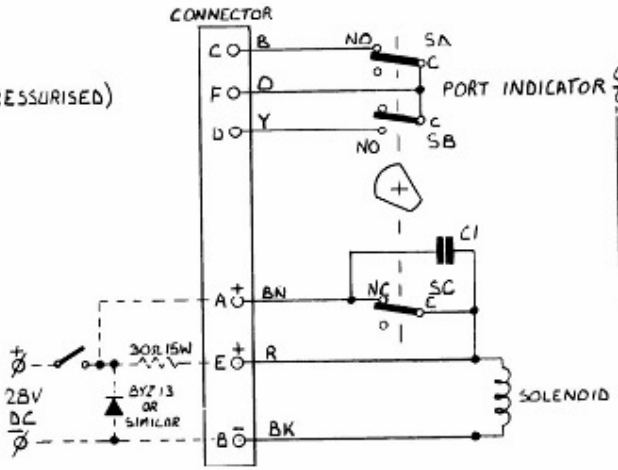

CONDITION 1

PORT INDICATOR { 250V AC / 30V DC } 3A RESISTIVE (SEA LEVEL)

CONDITION	28V POWER + PIN	28V POWER − PIN	PORT REFERENCE IN DIRECTION OF ARROW A	AUXILIARY CIRCUIT CONNECTED PIN	AUXILIARY CIRCUIT CONNECTED PIN
1	DE-ENERGISED		1 4 2 3	C	F
2	E	B	1 4 2 3	D	F

REF.	FEATURE SIZE	NO.OFF	CHARACTER	POS. TOL.	ISSUE	DATE	MOD. No.
					3		ECN/M/ 6473
					2		ECN/M 4395
					1		DRN 2281

O.A. DATE

PROD. REL. DATE

ENG. APP. DATE

CHECKED DATE

DRAWN TJW DATE

ORIGINAL SCALE 1:1 DO NOT SCALE PRINT

DIMENSIONS IN. mm

CERTIFIED AT ISSUE

MATERIAL: SWITCH BODY ALUMINIUM ALLOY

PROTECTIVE FINISH: STATOR ALOCROM 1200

GENERAL TOLERANCE UNLESS OTHERWISE STATED ±0.5

FINISH TO BE UNLESS OTHERWISE STATED 1.6

RESPONSIBLE AUTHORITY

TITLE: OUTLINE DRG. ROTARY SWITCH MWS 15-42/5782

SECURITY CLASSIFICATION

CONTRACTORS DRAWING NUMBER A2/5782

SHEET 1 OF 1 SHEETS

SERVICE DRAWING NUMBER

1713-384