ATTENUATOR
FLANGE MOUNT 100 WATT

DATA SHEET **PART NUMBER: 33P7024F** SHEET 1 OF 1 EN 13-2240 07/09/2013

FEATURES

- Low VSWR
- Aluminum Nitride
- High Power handling
- Easy Installation
- 100% Tested
- Low Passive Intermodulation

APPLICATIONS

- Mobile Networks
- Broadcast
- High Power Amplifiers
- Instrumentation
- Isolators

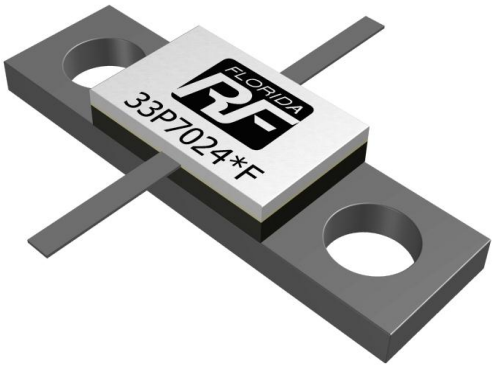

GENERAL DESCRIPTION

High power flange mount components offer high performance and the convenience of bolt on installation. The typical attenuation values are 1-20 dB and 30 dB. Maximum power rating of up to 400 Watts can be achieved on a single device.

SPECIFICATIONS

1.0 ELECTRICAL

Nominal Impedance:	50 Ω
Frequency Range:	DC – 2.7 GHz
Attenuation:	1 - 20, 30 dB
VSWR:	1.20:1 Max (DC - 2.5 GHz)
	1.30:1 Max (2.5 - 2.7 GHz)
Passive Intermodulation:	-108 dBc Max
	(@ 2x 43 dBm input)
Power Rating:	100 Watts
Operating Temperature:	-55 °C To +150 °C
Attenuation Accuracy:	1-10 dB ± 0.5 dB
	11-20 dB ± 1.0 dB
	30 dB ± 1.5 dB

2.0 MECHANICAL

Flange:	Copper, Nickel Plated
Substrate	Aluminum Nitride
Cover:	Alumina
Tab:	Beryllium Copper, Silver Plated
Resistive Film:	Thin Film

3.0 UNIT MARKING

Logo, Part Number

4.0 PACKAGING

Standard:	Tray Packaging

5.0 PART NUMBERING

Part Identifier:	33P7024*F
	* = dB value

Note: Specifications are subject to change without notice

POWER RATING AND DERATING

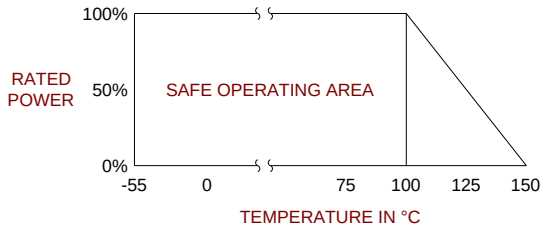

MECHANICAL OUTLINE

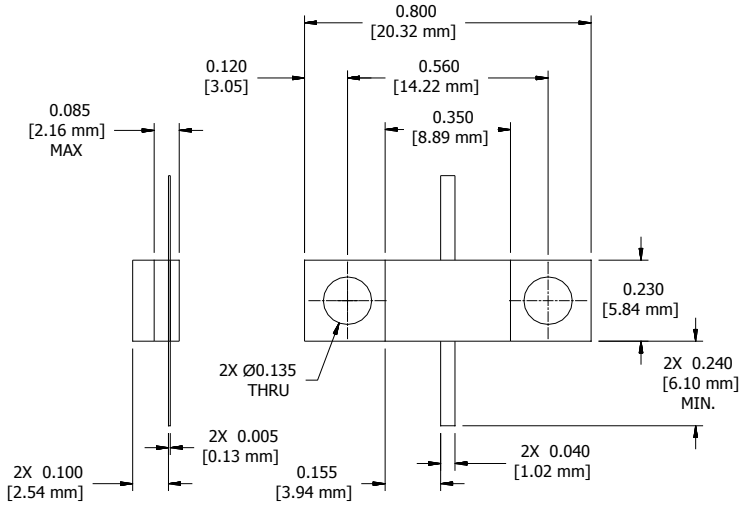

Unless otherwise Specified: TOLERANCE: ± .010