JYEBAO www.jyebao.com.tw

ADS-VNAPC8N3	Ruggedized NMD 3.5 Jack To N Plug	50Ω

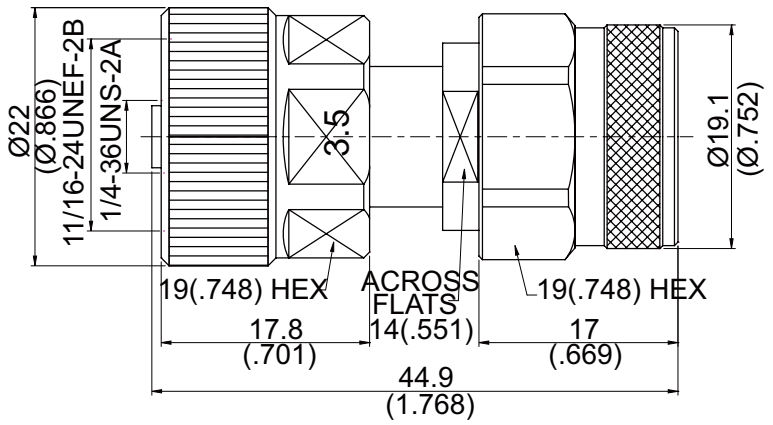

Note: NMD 3.5 Jack to be mounted directly on vector network analyser.

Parts	Material	Plating (Micro-inch)
Wave Washer	Brass	Gold 4 Over Nickel-Phosphorus Alloy 80 Over Copper 20
Retainer Ring	Brass	Tin-Zinc-Copper-Alloy 100 Over Copper 50
Gasket	Silicon	
Ferrule	Brass	Gold 4 Over Nickel-Phosphorus Alloy 80 Over Copper 20
Insulator	PSU	
Holder	Brass	Gold 4 Over Nickel-Phosphorus Alloy 80 Over Copper 20
Contact Pin	Beryllium Copper	Gold 20 Over Nickel 50 Over Copper 20
Body	Stainless Steel	Passivated
Coupling Nut	Stainless Steel	Passivated

Weight:

This part number complies with RoHS.

Notice: JYEBAO reserves the right to make modifications deemed appropriate.