THIS DRAWING IS PROPRIETARY AND CONFIDENTIAL.

REV.	DESCRIPTION	DATE	BY	APPVD
A	INITIAL RELEASE ECO 65487	5/14/2007	MPK	RS
A1	ECO 105240	3/25/2010	MJM	RS

MECHANICAL CHARACTERISTICS

INTERFACE	MIL-STD-348, FIGURE 310-1
IN ACCORDANCE WITH THE INTENT OF SLANT SHEET	MIL-PRF-39012/56 REF.
RECOMMENDED MATING TORQUE	9 IN-LBS. NOM.
COUPLING PROOF TORQUE	15 IN-LBS. MIN.
COUPLING NUT RETENTION	60 LBS. MIN.
FORCE TO ENGAGE	2 IN-LBS. MAX.
FORCE TO DISENGAGE	2 IN-LBS. MAX.
DURABILITY	500 CYCLES MIN.
AXIAL CONTACT RETENTION (FROM INTERFACE)	6 LBS. MIN.
AXIAL CONTACT RETENTION (FROM CABLE)	6 LBS. MIN.
CABLE RETENTION	30 LBS. MIN.
MASS	MASS = 6.90 GRAMS NOM.

ELECTRICAL CHARACTERISTICS

IMPEDANCE	50 Ohms NOM.
MAXIMUM FREQUENCY	18 GHz
VSWR DC - 12.46 GHz	1.12:1 MAX.
12.46 - 18 GHz	1.16:1 MAX.
INSERTION LOSS	0.06 $\sqrt{F}$ (GHz) dB MAX.
DIELECTRIC WITHSTANDING VOLTAGE	750 Vrms MIN.
INSULATION RESISTANCE	5000 MegaOhms MIN.
RF LEAKAGE DC - 18 GHz	-90 dB MIN.
CORONA	190 Vrms MIN. @ 70,000 FEET
RF HIGH POTENTIAL	500 Vrms MIN.
CONTACT RESISTANCE (INNER)	4.0 MilliOhms MAX.
CONTACT RESISTANCE (OUTER)	2.0 MilliOhms MAX.

ENVIRONMENTAL CHARACTERISTICS

OPERATING TEMPERATURE	-65˚C TO 165˚C
VIBRATION	MIL-STD-202, METHOD 204, CONDITION D
MECHANICAL SHOCK	MIL-STD-202, METHOD 213, CONDITION I
THERMAL SHOCK	MIL-STD-202, METHOD 107, CONDITION B
MOISTURE RESISTANT	MIL-STD-202, METHOD 106, CONDITION (NO VIBRATION)
CORROSION	MIL-STD-202, METHOD 101, CONDITION B, 5%

MATERIALS AND FINISH

BODY, CLAMP NUT, & COUPLING NUT	STEEL, CORROSION RESISTANT, PER ASTM-A-582, UNS NO. S30300, PASSIVATE PER ASTM-A-967
CONTACT	BERYLLIUM COPPER, ASTM-B-196, GOLD PLATED PER MIL-DTL-45204, OVER NICKEL PLATE PER QQ-N-290
CONTACT RING	BRASS, PER ASTM-B16 GOLD PLATE PER MIL-DTL-45204, OVER NICKEL PLATE PER QQ-N-290
SNAP RING	BERYLLIUM COPPER, PER ASTM-B-197
INSULATOR(S)	TFE FLUOROCARBON PER ASTM-D-1710
GASKET	SILICONE RUBBER PER ZZ-R-765

APPLICATION

CABLE(S)	UFA125A
INSTALLATION	PER CONFIGURATOR

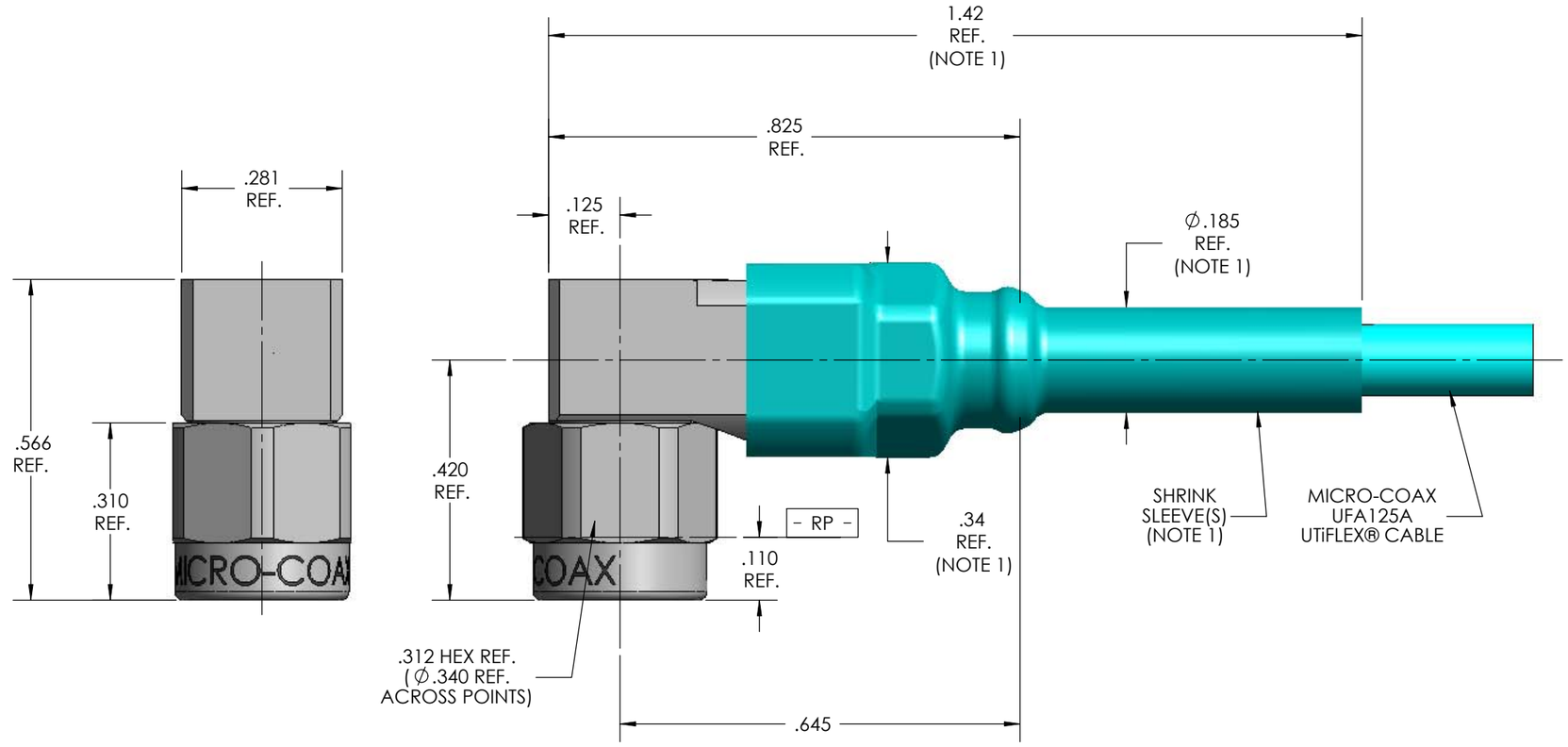

NOTE:

1. MARKER LOCATION ON THIS DRAWING IS FOR REFERENCE ONLY AND IS SUBJECT TO CHANGE WITHOUT NOTICE.

SPECIFICATION DRAWING

THIS SPECIFICATION IS THE PROPERTY OF MICRO-COAX, INC. AND MAY NOT BE USED OR COPIED WITHOUT THE EXPRESS WRITTEN PERMISSION OF MICRO-COAX, INC.

	INITIALS	DATE
DWN.	MPK	5/14/07
CHKD.	MJR	4/8/10
APPVD.		

MICRO-COAX®
Leading the way in transmission line solutions.
Copyright Micro-Coax, Inc.

TOLERANCES UNLESS OTHEWISE SPECIFIED	
.XX	± .02
.XXX	± .005
.XXXX	± .0010
ANGLES	± 2°

TITLE: SMA PLUG, MRA, UFA125A CABLE

ALL DIMENSIONS IN INCHES UNLESS OTHERWISE SPECIFIED. SCREW THDS. TO BE IN ACCORD WITH ANSI B1.1-1989.

FSCM NO.	SIZE	SCALE	SHEET NO.	DRAWING NO.	REV
64639	B	4:1	1 OF 1	SD903552	A1