REVISIONS				
ZONE	REV.	DESCRIPTION	DATE	APPROVED
	A	ORIGINAL RELEASE	7/12/10	

Description:

Integrated RF module that contains an input limiter, limiting amplifier, and output fixed attenuator which is designed for Military and Industrial applications. This module is supplied in a SMA connectorized housing.

This model provides the following performance.

Specifications:

Frequency Range:	2.0 to 18.0 GHz
Input Power:	-50 to +30dBm CW
Output Power:	+2.0dBm Nominal +/-2.0dB (over input power range)
Noise Figure:	10dB Max.
Spurious Rejection:	-60dBc typ.
Harmonic Rejection:	-10dBc typ.
VSWR Input/Output:	2.0:1 Max.
DC Voltage Supply:	+12 to +15VDC
DC Current Draw:	TBD mA Max.
Connectors:	SMA(F)
Specifications Temperature:	+23 Deg. C

Features:

Internal Voltage Regulation
Unconditional Stability
Standard Operating Temperature -20 to +70 Deg. C

Available Options:

Various Package types
Various Connector types
Temperature Compensation
Hermetic Sealing
Gain and Phase Matching
MIL-STD-883 Screening Available

Functional Block Diagram

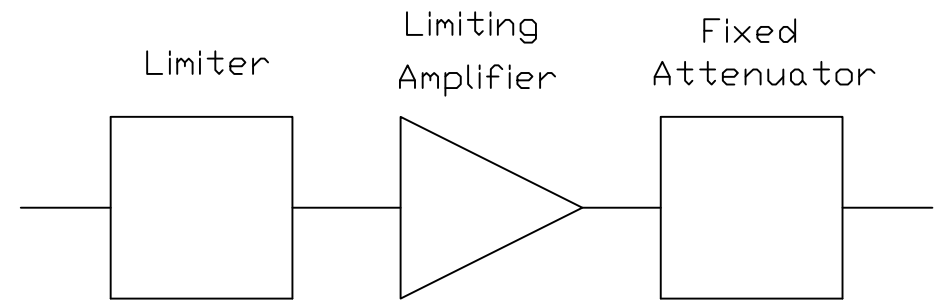

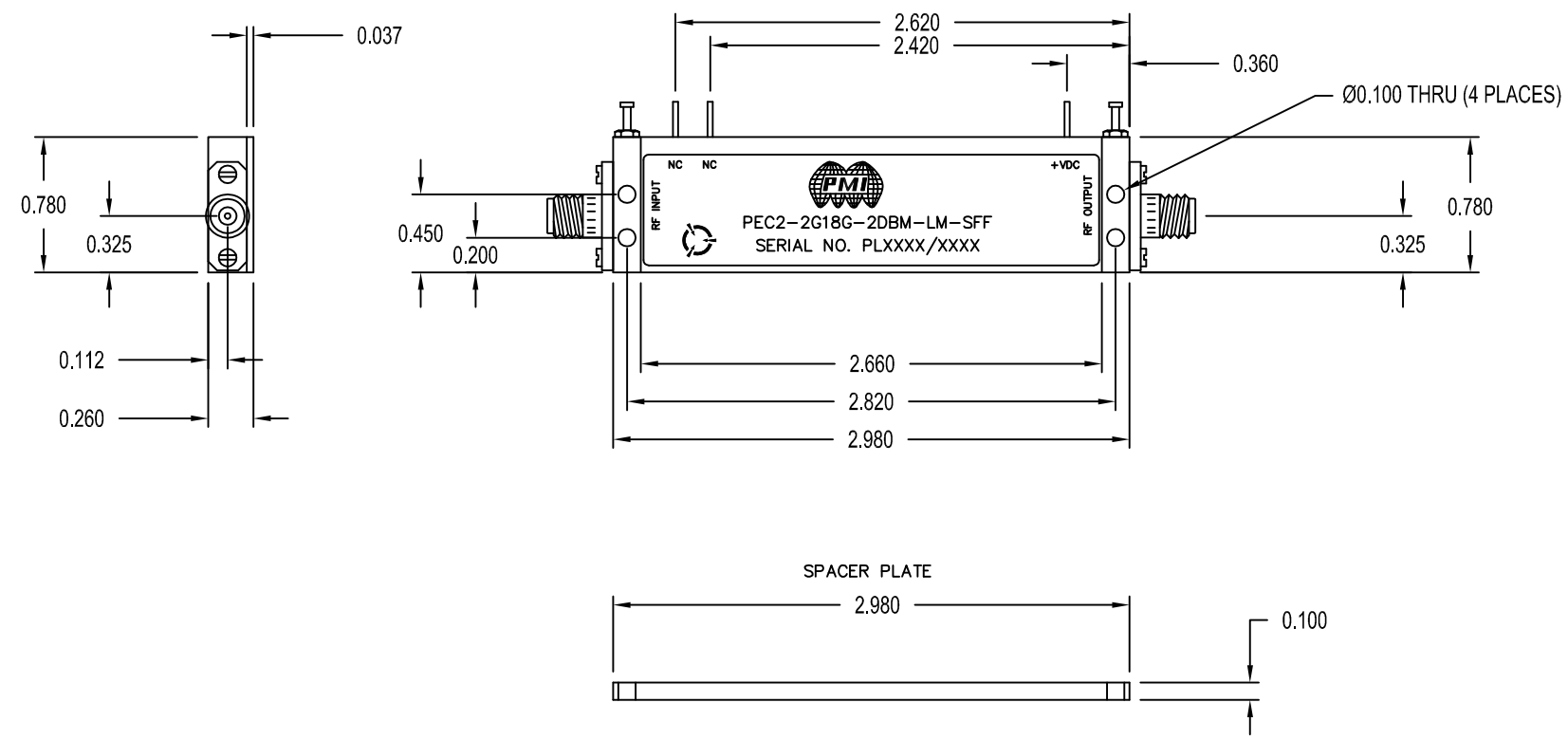

Environmental Ratings:

Temperature:	-20 to +70 Deg. C (Operating) ; -55 to +85 Deg C Available)
	-55 to +125 Deg. C (Storage)
Humidity:	MIL-STD-202F, METHOD 103B COND B.
Shock:	MIL-STD-202F, METHOD 213B COND B.
Altitude:	MIL-STD-202F, METHOD 105C COND B.

Temperature Cycle: MIL-STD-202F, METHOD 107D COND A

Note: The above specifications are subject to change or revision.

NEXT ASSY	USED ON
APPLICATION	

UNLESS OTHERWISE SPECIFIED DIMENSIONS ARE IN INCHES
TOLERANCES ARE:
FRACTIONS ± DECIMALS .XX ± 0.010 .XXX ± 0.005 ANGLES ±

MATERIAL: ALUMINUM ALLOY 6061-T6
FINISH: Gold Plated
DO NOT SCALE DRAWING

PART NO.

APPROVALS	DATE
DRAWN KM	11/18/09
CHECKED	
ISSUED	

PLANAR MONOLITHICS INDUSTRIES
5715 INDUSTRY LANE UNIT 11
FREDERICK, MARYLAND

TITLE
PRODUCT FEATURE
PEC2-2G18G-2DBM-LM-SFF

SIZE	FSCM NO.	DWG NO.	REV.
B		27012241	A

SCALE N/S SHEET 1 OF 1