REVISIONS				
ZONE	REV	DESCRIPTION	DATE	APPROVED

MECHANICAL

CONTACT: BREAK BEFORE MAKE
ACTUATOR: LATCHING
SWITCHING SPEED: 20 mSEC MAX

ELECTRICAL

ACTUATOR VOLTAGE: 28.0±3.0 Vdc
ACTUATOR CURRENT: 0.200 A MAX @ 28.0 Vdc
POWER HANDLING: 350W CW @ 1.0 GHz

ENVIRONMENTAL

OPERATING TEMP: −54°C TO +90°C
SINE VIBRATION: 30 G'S rms
LIFE: 1,000,000 CYCLES
RANDOM VIBRATION: 20G'S rms

SPECIFICATION:

FREQUENCY RANGE (GHz):	DC−4.0
VSWR (Max.):	1.30:1
INSERTION LOSS (dB):	0.30
ISOLATION (dB):	70
IMPEDANCE (Ohms):	50

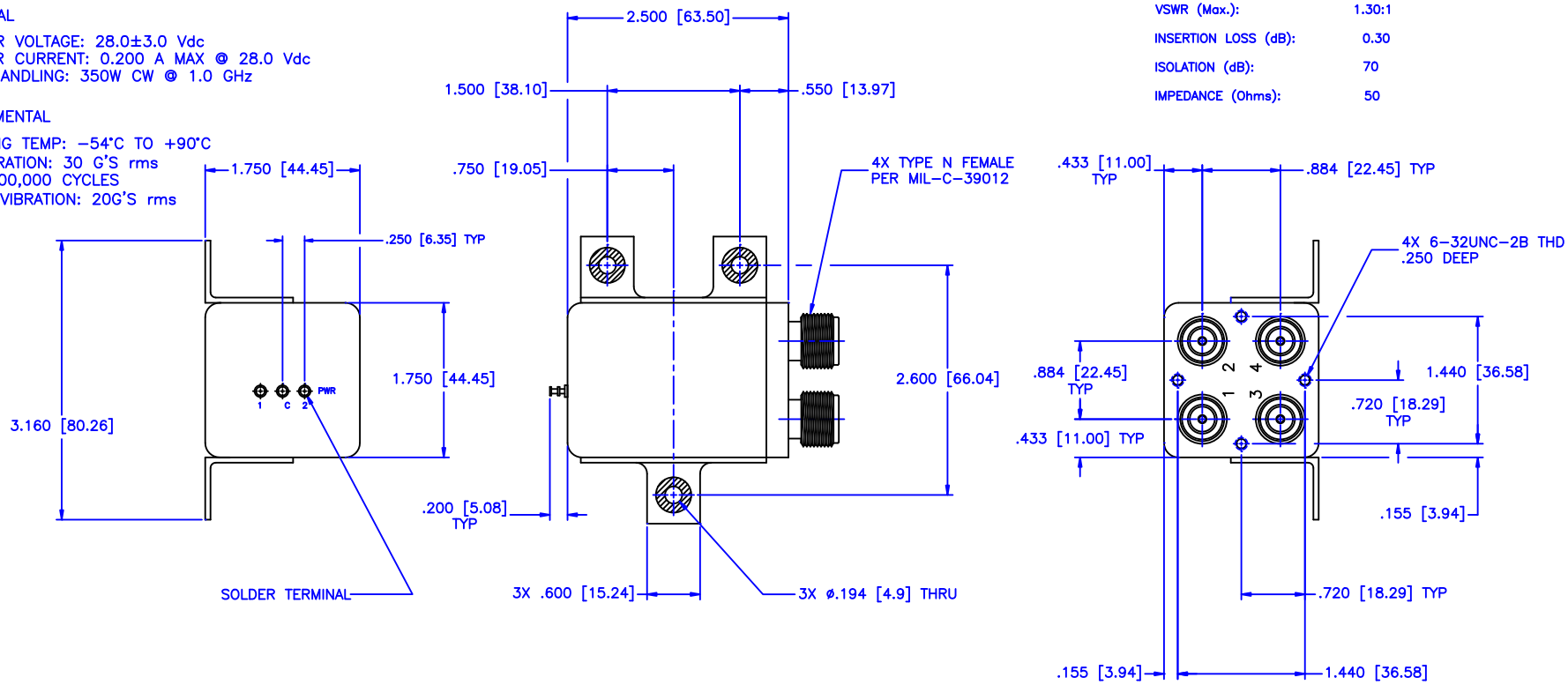

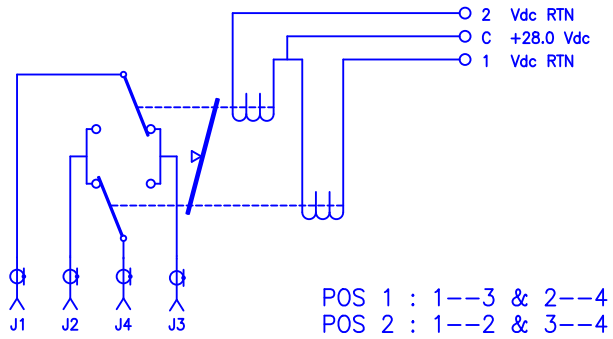

POS 1 : 1−−3 & 2−−4
POS 2 : 1−−2 & 3−−4

MATERIAL:	MCLI — MICROWAVE COMMUNICATIONS LABORATORIES INC. 7255 30TH AVE. N. SAINT PETERSBURG, FL 33710 TEL: (727) 344−6254 FAX: (727) 381−6116 hhtp://WWW.MCLI.COM	SCALE: N/A	
		SHEET: N/A	
	UNLESS OTHERWISE SPECIFIED: TOLERANCES IN (INCHES) OR [mm] (MILLIMETERS) FRACTIONS: ± 1/64 DECIMALS: ±.01 ±.005 ANGLE: ±1/2°	DRAWING TITLE: ELECTROMECHANICAL SWITCHES	
		PART NO. C2−3−L/28P	
DRAWN: Paiboon Luekhamhan	DATE: 02−18−2009	PROPRIETARY NOTICE: THE INFORMATION IN THIS DRAWING IS PROPRIETARY AND SHALL NOT BE USED OR DISCLOSED WITHOUT WRITTEN PERMISSION FROM MICROWAVE COMMUNICATIONS LABORATORIES INC. (MCLI)	
APPROVED: T. Nguyen	DATE: 02−18−2009	THIRD ANGLE PROJECTION	
		CAGE CODE: 0D2L5	SIZE: C / REV: N/A / DO NOT SCALE THE DRAWING / DWG NO. 84168