| REVISIONS | | | | |
|---|---|---|---|---|
| ZONE | REV. | DESCRIPTION | DATE | APPROVED |
| | – | ORIGINAL RELEASE | 9/28/09 | |

## Description:

Low Noise Amplifier designed for Military and Industrial applications. This amplifier is supplied in our standard PE2 housings in a cascade layout that can be used as a SMA connectorized or a surface mount component. Other packages and connector types are available.

This model provides the following performance. Data is available upon request.

## Specifications:

| | |
|---|---|
| Frequency Range: | 13.0 to 14.0 GHz |
| Gain: | 60dB Typ. |
| Gain Flatness: | +/-1.0dB Max. |
| Noise Figure: | 3.5dB Typ. |
| OP1dB: | 12dBm Min. |
| VSWR Input/Output: | 2.0:1 Max. |
| DC Voltage Supply: | +12 to +15VDC |
| DC Current Draw: | 325mA Max. |

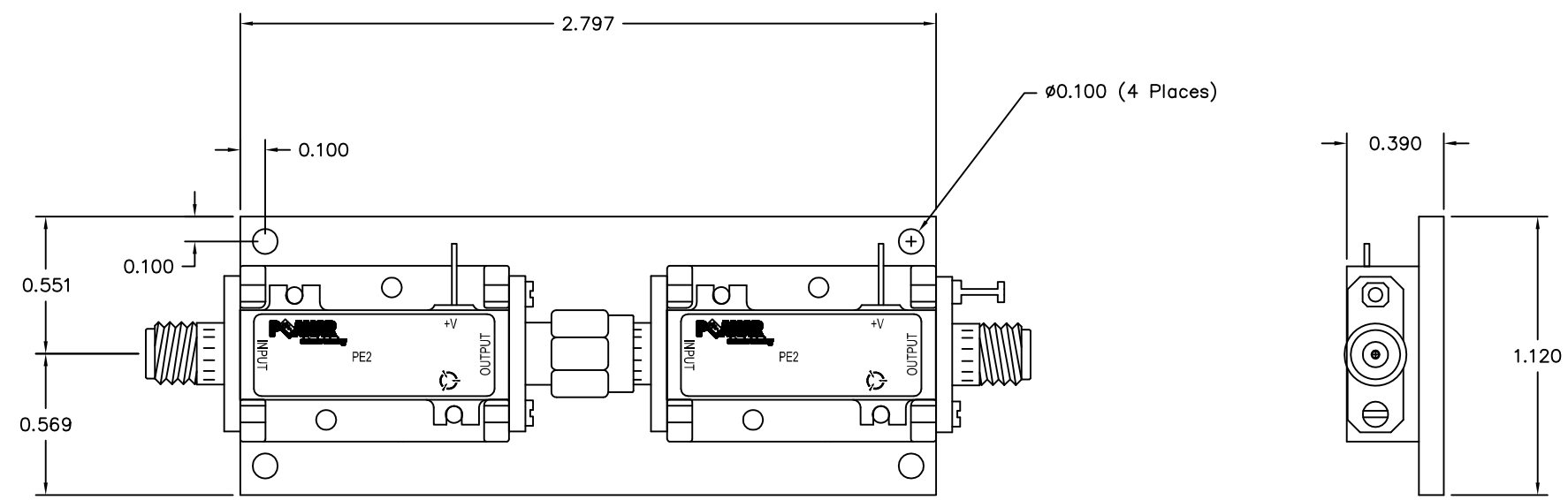


## Features:

Internal Voltage Regulation
Unconditional Stability
Standard Operating Temperature -20 to +70 Deg. C

## Available Options:

Various Package types
Various Connector types
Temperature Compensation
Hermetic Sealing
Gain and Phase Matching
MIL-STD-883 Screening Available

## Environmental Ratings:

| | |
|---|---|
| Temperature: | -20 to +70 Deg. C (Operating) ; -55 to +85 Deg C Available) |
| | -55 to +125 Deg. C (Storage) |
| Humidity: | MIL-STD-202F, METHOD 103B COND B. |
| Shock: | MIL-STD-202F, METHOD 213B COND B. |
| Altitude: | MIL-STD-202F, METHOD 105C COND B. |

Temperature Cycle: MIL-STD-202F, METHOD 107D COND A

Note: The above specifications are subject to change or revision.

UNLESS OTHERWISE SPECIFIED
DIMENSIONS ARE IN INCHES
TOLERANCES ARE:
FRACTIONS ± DECIMALS .XX ± 0.010 .XXX ± 0.005 ANGLES ±

MATERIAL: 6061–T6 Aluminum
FINISH: Gold Plate over Nickel
DO NOT SCALE DRAWING

PART NO.

| APPROVALS | DATE |
|---|---|
| DRAWN K Mason | 9/28/09 |
| CHECKED | |
| ISSUED | |

PLANAR Electronic Technology
5715 Industry Lane, Unit 11
FREDERICK, MARYLAND

TITLE PRODUCT FEATURE
PE2-60-13G14G-3R5-14-12-SFF-WEB

| SIZE | CAGE CODE | DWG NO. | REV. |
|---|---|---|---|
| B | 1LK53 | WEB – MODEL | A |

SCALE N/A SHEET 1 OF 1