PASTERNACK®
www.pasternack.com

50 Ohm 1 Watts Precision 2.4mm Male RF Load Up To 50 GHz

TECHNICAL DATA SHEET PE6178

50 Ohm 1 Watts Precision 2.4mm Male RF Load Up To 50 GHz

Pasternack Enterprises line of 2.4mm Terminations are available in a 1 Watt version that operates from DC to 50 GHz. Our 2.4mm Terminations are manufactured for durability with Passivated Stainless Steel bodies and Gold Plated BeCu (Beryllium Copper) contacts and are with a Chain or No Chain. Pasternack's Male and Female 2.4mm Terminations will mate with 2.4mm and 1.85mm connectors.

- DC to 50 GHz
- 1W power rating
- Passivated Stainless Steel bodies
- Gold plated BeCu contacts
- Chain and No Chain options

Configuration

RF Load Design	Precision
Connector	2.4mm Male
Heat Sink	Passivated Stainless Steel
Connection Method	Standard
Body Style	Straight

Electrical Specifications

Frequency Range, GHz	DC to 50
Impedance, Ohms	50
Maximum VSWR	1.45:1
Maximum Input Power, Watts	1
Frequency 1	
Frequency, GHz	DC to 18
VSWR	1.1:1
Power Handling, Watts	1
Frequency 2	
Frequency, GHz	18 to 40
VSWR	1.3:1
Power Handling, Watts	1
Frequency 3	
Frequency, GHz	40 to 50
VSWR	1.45:1
Power Handling (Watts)	1

Mechanical Specifications

Temperature

Operating Range, deg C	-55 to +100

Click the following link (or enter part number in "SEARCH" on website) to obtain additional part information including price, inventory and certifications: 50 Ohm 1 Watts Precision 2.4mm Male RF Load Up To 50 GHz PE6178

The information contained in this document is accurate to the best of our knowledge and representative of the part described herein. It may be necessary to make modifications to the part and/or the documentation of the part, in order to implement improvements. Pasternack reserves the right to make such changes as required. Unless otherwise stated, all specifications are nominal.

Pasternack Enterprises, Inc. • P.O. Box 16759, Irvine, CA 92623
Phone: (866) 727-8376 or (949) 261-1920 • **Fax:** (949) 261-7451
Sales@Pasternack.com • Techsupport@Pasternack.com

ISO 9001 : 2008 Registered

© 2013 Pasternack Enterprises All Rights Reserved

PASTERNACK®
www.pasternack.com

50 Ohm 1 Watts Precision 2.4mm Male RF Load Up To 50 GHz

TECHNICAL DATA SHEET PE6178

Size

Length, in [mm]	0.59 [14.99]
Width/Dia., in [mm]	0.313 [7.95]
Weight, lbs [g]	0.013 [5.9]

Connector

Type	2.4mm Male
Mating Cycles	500
Inner Conductor Material and Plating	Beryllium Copper, Gold
Coupling Nut Material and Plating	Passivated Stainless Steel
Hex Size, inch	5/16
Torque, in-lbs [Nm]	8 [0.9]
Body Material and Plating	Passivated Stainless Steel
Dielectric Type	Plastic Bead

Compliance Certifications (visit www.Pasternack.com for current document)

RoHS Compliant	Yes

Plotted and Other Data

Notes:	Values at 25 °C, sea level

50 Ohm 1 Watts Precision 2.4mm Male RF Load Up To 50 GHz from Pasternack Enterprises has same day shipment for domestic and International orders. Our RF, microwave and fiber optic products maintain a 99% availability and are part of the broadest selection in the industry.

Click the following link (or enter part number in “SEARCH” on website) to obtain additional part information including price, inventory and certifications: 50 Ohm 1 Watts Precision 2.4mm Male RF Load Up To 50 GHz PE6178

URL: http://www.pasternack.com/1-watts-2.4mm-male-rf-load-up-to-50-ghz-precision-pe6178-p.aspx

The information contained in this document is accurate to the best of our knowledge and representative of the part described herein. It may be necessary to make modifications to the part and/or the documentation of the part, in order to implement improvements. Pasternack reserves the right to make such changes as required. Unless otherwise stated, all specifications are nominal.

Pasternack Enterprises, Inc. • P.O. Box 16759, Irvine, CA 92623
Phone: (866) 727-8376 or (949) 261-1920 • **Fax:** (949) 261-7451
Sales@Pasternack.com • Techsupport@Pasternack.com

ISO 9001 : 2008 Registered

© 2013 Pasternack Enterprises All Rights Reserved

PE6178 CAD Drawing

50 Ohm 1 Watts Precision 2.4mm Male RF Load Up To 50 GHz

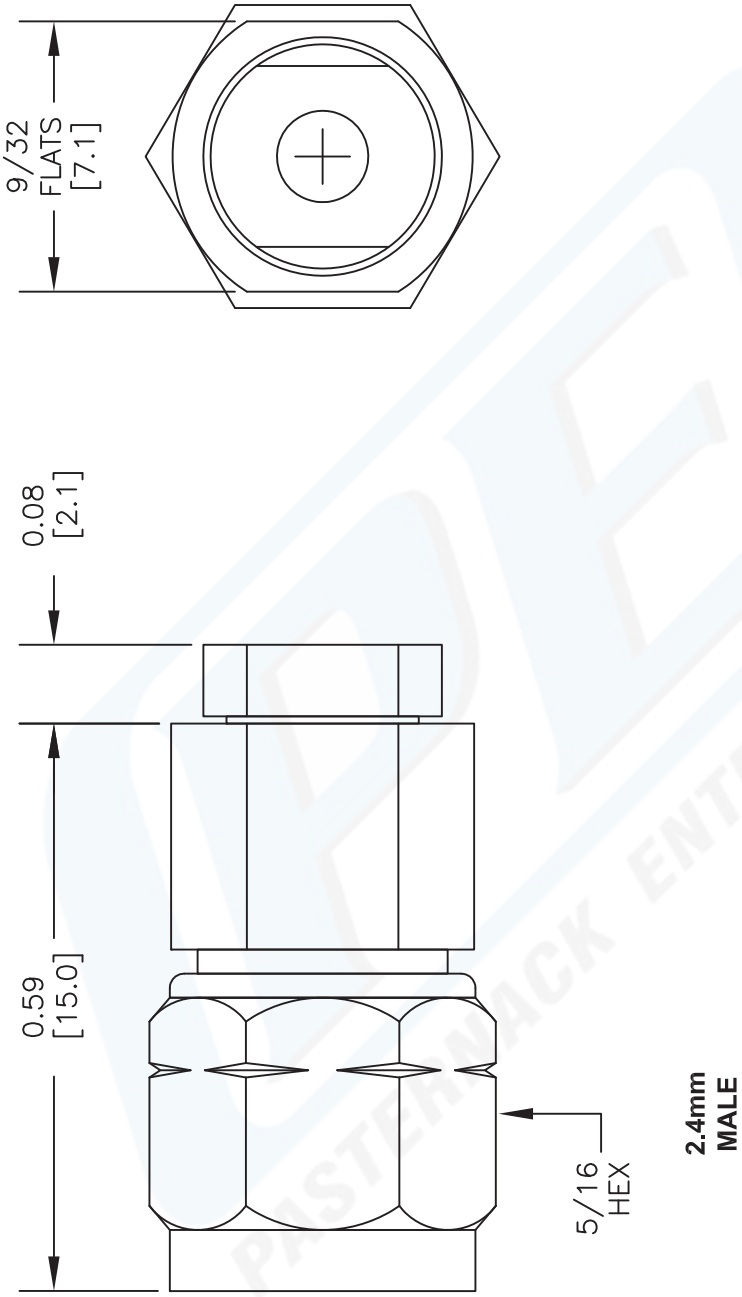

NOTES:
1. UNLESS OTHERWISE SPECIFIED ALL DIMENSIONS ARE NOMINAL.
2. ALL SPECIFICATIONS ARE SUBJECT TO CHANGE WITHOUT NOTICE AT ANY TIME.
3. DIMENSIONS ARE IN INCHES [mm].

DWG TITLE
PE6178

FSCM NO. 53919

CAD FILE 071712 | SCALE N/A | SIZE A | 2233

PASTERNACK®
Pasternack Enterprises, Inc.
P.O. Box 16759 | Irvine | CA | 92623
Phone: (949) 261-1920 | **Fax:** (949) 261-7451
Website: www.pasternack.com | **E-Mail:** sales@pasternack.com

© 2013 Pasternack Enterprises All Rights Reserved