PASTERNACK®
THE ENGINEER'S RF SOURCE

Medium Power 25 Watts RF Load Up To 18 GHz With N Male Input Round Body Black Anodized Aluminum Heatsink

TECHNICAL DATA SHEET PE6205

Configuration

Connector	N Male
Connector Specification	MIL-STD-348
Heat Sink	Black Anodized Aluminum Heatsink
Connection Method	Standard
Body Style	Straight

Electrical Specifications

Frequency Range, GHz	DC to 18
Impedance, Ohms	50
Maximum VSWR	1.6:1
Maximum Input Power, Watts	25
Peak Power, Watts	500
Frequency 1	
Frequency, GHz	DC to 6
VSWR	1.3:1
Frequency 2	
Frequency, GHz	6 to 12.4
VSWR	1.45:1
Frequency 3	
Frequency, GHz	12.4 to 18
VSWR	1.6:1

Mechanical Specifications

Temperature	
Operating Range, deg C	-65 to +125
Width/Dia., in [mm]	2.3 [58.42]
Color	Black
Connector	
Type	N Male
Inner Conductor Material and Plating	Beryllium Copper, Gold
Coupling Nut Material and Plating	Passivated Stainless Steel
Body Material and Plating	Passivated Stainless Steel
Dielectric Type	PTFE

Compliance Certifications (visit www.Pasternack.com for current document)

RoHS Compliant	Yes

Click the following link (or enter part number in "SEARCH" on website) to obtain additional part information including price, inventory and certifications: Medium Power 25 Watts RF Load Up To 18 GHz With N Male Input Round Body Black Anodized Aluminum Heatsink PE6205

The information contained in this document is accurate to the best of our knowledge and representative of the part described herein. It may be necessary to make modifications to the part and/or the documentation of the part, in order to implement improvements. Pasternack reserves the right to make such changes as required. Unless otherwise stated, all specifications are nominal.

Pasternack Enterprises, Inc. • P.O. Box 16759, Irvine, CA 92623
Phone: (866) 727-8376 or (949) 261-1920 • **Fax:** (949) 261-7451
Sales@Pasternack.com • Techsupport@Pasternack.com

ISO 9001 : 2008 Registered

© 2014 Pasternack Enterprises All Rights Reserved

Medium Power 25 Watts RF Load Up To 18 GHz With N Male Input Round Body Black Anodized Aluminum Heatsink

Plotted and Other Data

Notes: Values at 25 °C, sea level

Medium Power 25 Watts RF Load Up To 18 GHz With N Male Input Round Body Black Anodized Aluminum Heatsink from Pasternack Enterprises has same day shipment for domestic and International orders. Our RF, microwave and fiber optic products maintain a 99% availability and are part of the broadest selection in the industry.

Click the following link (or enter part number in "SEARCH" on website) to obtain additional part information including price, inventory and certifications: Medium Power 25 Watts RF Load Up To 18 GHz With N Male Input Round Body Black Anodized Aluminum Heatsink PE6205

URL: http://www.pasternack.com/25-watts-n-male-rf-load-up-to-18-ghz-pe6205-p.aspx

The information contained in this document is accurate to the best of our knowledge and representative of the part described herein. It may be necessary to make modifications to the part and/or the documentation of the part, in order to implement improvements. Pasternack reserves the right to make such changes as required. Unless otherwise stated, all specifications are nominal.

Pasternack Enterprises, Inc. • P.O. Box 16759, Irvine, CA 92623
Phone: (866) 727-8376 or (949) 261-1920 • **Fax:** (949) 261-7451
Sales@Pasternack.com • Techsupport@Pasternack.com

ISO 9001 : 2008 Registered

© 2014 Pasternack Enterprises All Rights Reserved

PE6205 CAD Drawing

Medium Power 25 Watts RF Load Up To 18 GHz With N Male Input
Round Body Black Anodized Aluminum Heatsink

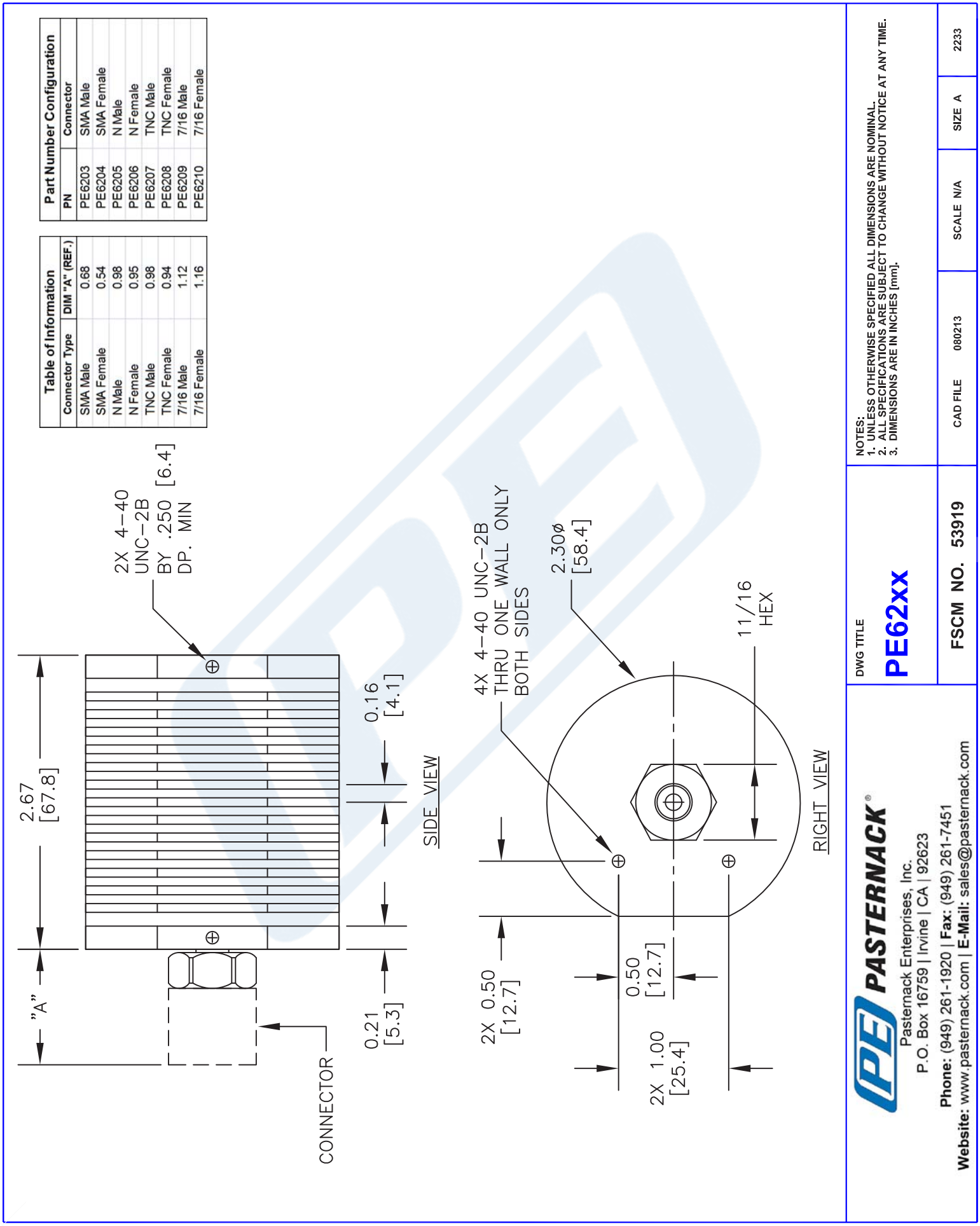

Table of Information

Connector Type	DIM "A" (REF.)
SMA Male	0.68
SMA Female	0.54
N Male	0.98
N Female	0.95
TNC Male	0.98
TNC Female	0.94
7/16 Male	1.12
7/16 Female	1.16

Part Number Configuration

PN	Connector
PE6203	SMA Male
PE6204	SMA Female
PE6205	N Male
PE6206	N Female
PE6207	TNC Male
PE6208	TNC Female
PE6209	7/16 Male
PE6210	7/16 Female

© 2014 Pasternack Enterprises All Rights Reserved