REVISIONS				
ZONE	REV	DESCRIPTION	Date	APPROVED

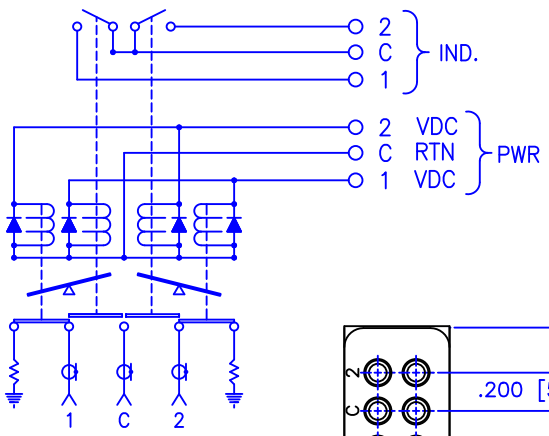

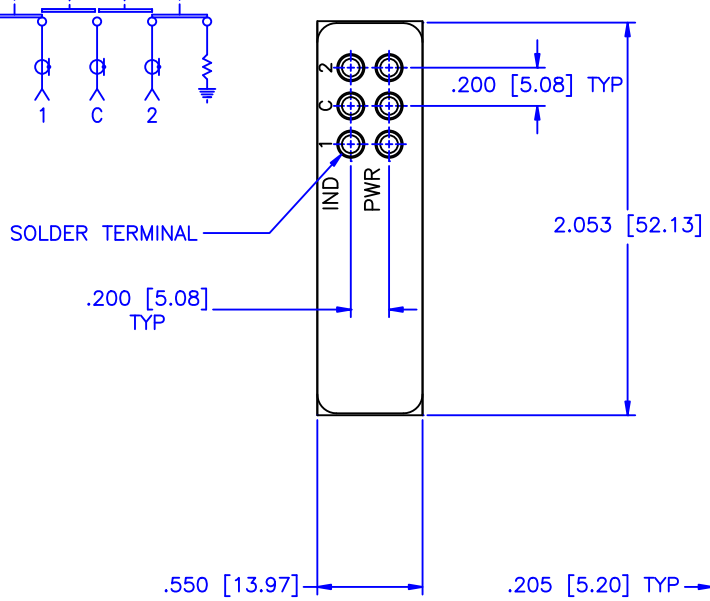

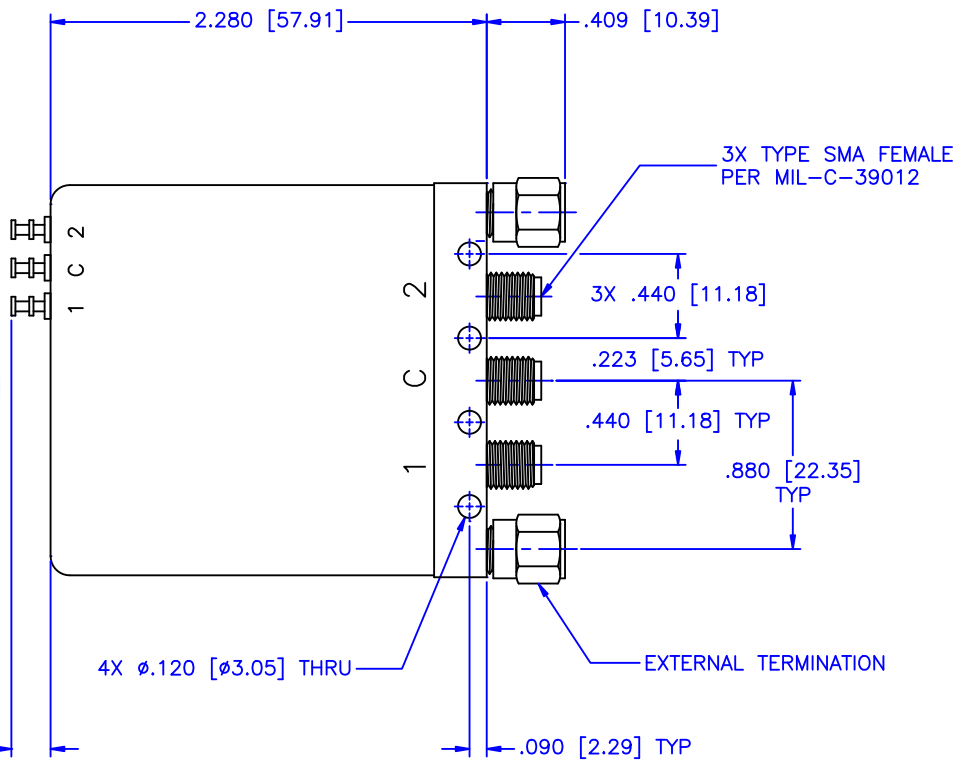

MECHANICAL

CONTACT: BREAK BEFORE MAKE
ACTUATOR: LATCHING
SWITCHING SPEED: 20 mSEC MAX

ELECTRICAL

ACTUATOR VOLTAGE: 28.0±3.0 Vdc
ACTUATOR CURRENT: 0.075 A MAX @ 28.0 Vdc
POWER HANDLING: 200W CW @ 1.0 GHz
IMPEDANCE: 50 Ohms

ENVIRONMENTAL

OPERATING TEMP: −54° C TO +90° C
SINE VIBRATION: 30 G'S rms
LIFE: 1,000,000 CYCLES
RANDOM VIBRATION: 20 G'S rms

SPECIFICATION:

FREQUENCY RANGE (GHz):	DC−2.0	2.0−4.0	4.0−8.0	8.0−12.4	12.4−18.0
VSWR (Max.):	1.20:1	1.25:1	1.30:1	1.40:1	1.50:1
INSERTION LOSS (dB):	0.20	0.25	0.30	0.40	0.50
ISOLATION (dB):	90	80	80	70	60

MATERIAL:

MCLI

MICROWAVE COMMUNICATIONS LABORATORIES INC.
7255 30TH AVE. N. SAINT PETERSBURG, FL 33710
TEL: (727) 344−6254 FAX: (727) 381−6116
hhtp://WWW.MCLI.COM

SCALE: N/A
SHEET: N/A

UNLESS OTHERWISE SPECIFIED:
TOLERANCES
IN (INCHES) OR [mm] (MILLIMETERS)
FRACTIONS: ± 1/64
DECIMALS: ±.01 ±.005
ANGLE: ±1/2°

DRAWING TITLE: ELECTROMECHANICAL SWITCHES

PART NO. K45−7−LIS

DRAWN: Paiboon Luekhamhan — DATE: 03−11−2009

APPROVED: T. Nguyen — DATE: 03−11−2009

PROPRIETARY NOTICE:
THE INFORMATION IN THIS DRAWING IS PROPRIETARY AND SHALL NOT BE USED OR DISCLOSED WITHOUT WRITTEN PERMISSION FROM MICROWAVE COMMUNICATIONS LABORATORIES INC. (MCLI)

THIRD ANGLE PROJECTION

CAGE CODE: 0D2L5

SIZE: A — REV: N/A

DO NOT SCALE THE DRAWING

DWG NO. 84274