REVISIONS				
ZONE	REV	DESCRIPTION	DATE	APPROVED

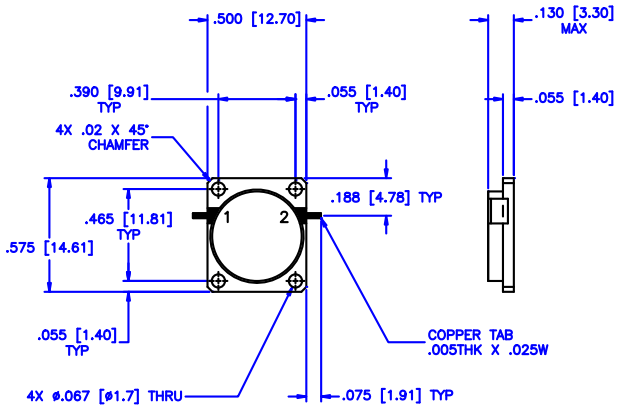

SPECIFICATIONS

Frequency Range:	7.25–7.75 GHz
Insertion Loss:	0.5dB Max.
Isolation:	20dB Min.
VSWR:	1.22:1 Max.
Impedance Nominal:	50 Ohms
Power Rating:	1 Watt
Operating Temperature:	−45°C to +85°C
Storage Temperature:	−55°C to +100°C

MATERIAL:

MCLI

MICROWAVE COMMUNICATIONS LABORATORIES INC.
7255 30TH AVE. N. SAINT PETERSBURG, FL 33710
TEL: (727) 344–6254 FAX: (727) 381–6116
hhtp://WWW.MCLI.COM

SCALE: N/A

SHEET: N/A

UNLESS OTHERWISE SPECIFIED:
TOLERANCES
IN (INCHES) OR [mm] (MILLIMETERS)
FRACTIONS: ± 1/64
DECIMALS: ±.01 ±.005
ANGLE: ±1/2°

DRAWING TITLE: DROP–IN ISOLATOR

PART NO. DI–40

DRAWN: Paiboon Luekhamhan — DATE: 01–05–2005

APPROVED: T. Nguyen — DATE: 01–05–2005

PROPRIETARY NOTICE:
THE INFORMATION IN THIS DRAWING IS PROPRIETARY AND SHALL NOT BE USED OR DISCLOSED WITHOUT WRITTEN PERMISSION FROM MICROWAVE COMMUNICATIONS LABORATORIES INC. (MCLI)

THIRD ANGLE PROJECTION

CAGE CODE: 0D2L5

SIZE: A — REV: N/A

DO NOT SCALE THE DRAWING

DWG NO. 82143