| REVISIONS | | | | |
|---|---|---|---|---|
| ZONE | REV | DESCRIPTION | Date | APPROVED |

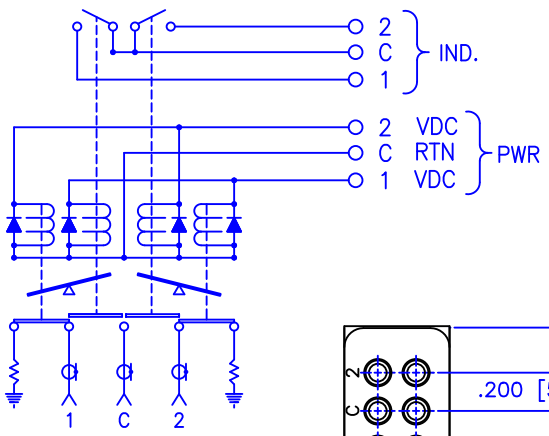


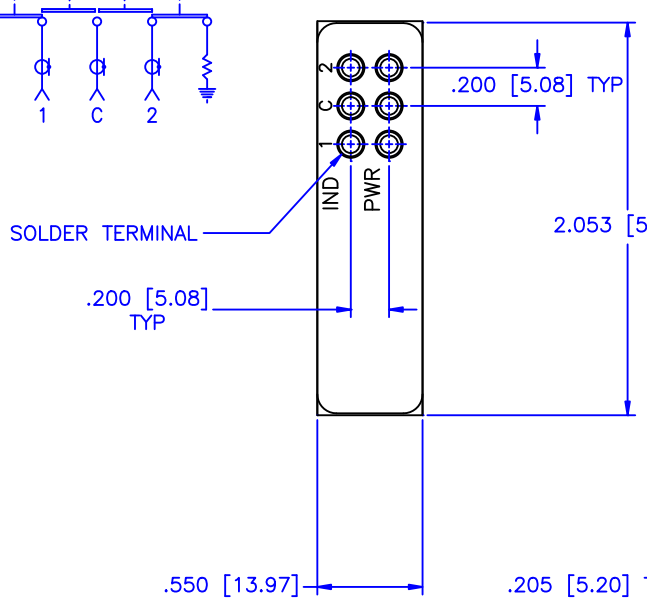


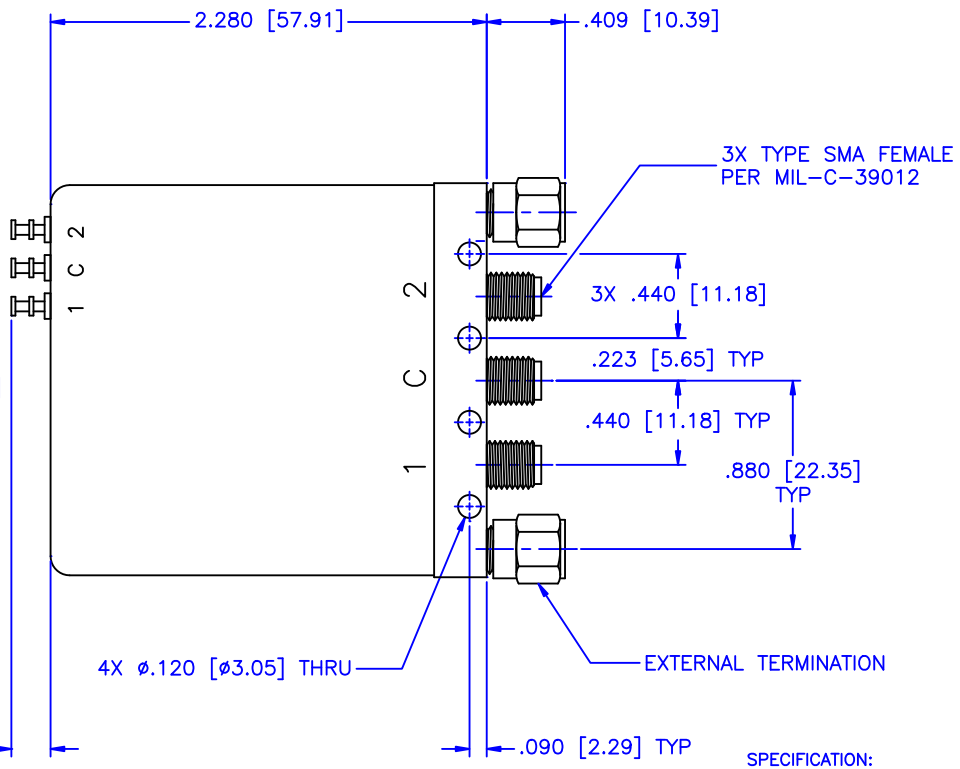


SPECIFICATION:

| | | |
|---|---|---|
| FREQUENCY RANGE (GHz): | DC–2.0 | 2.0–4.0 |
| VSWR (Max.): | 1.20:1 | 1.25:1 |
| INSERTION LOSS (dB): | 0.20 | 0.25 |
| ISOLATION (dB): | 90 | 80 |

MECHANICAL

CONTACT: BREAK BEFORE MAKE
ACTUATOR: LATCHING
SWITCHING SPEED: 20 mSEC MAX

ELECTRICAL

ACTUATOR VOLTAGE: 28.0±3.0 Vdc
ACTUATOR CURRENT: 0.075A MAX @ 28.0 Vdc
POWER HANDLING: 200W CW @ 1.0 GHz
IMPEDANCE: 50 Ohms

ENVIRONMENTAL

OPERATING TEMP: –54° C TO +90° C
SINE VIBRATION: 30 G'S rms
LIFE: 1,000,000 CYCLES
RANDOM VIBRATION: 20 G'S rms

MATERIAL:

MCLI
MICROWAVE COMMUNICATIONS LABORATORIES INC.
7255 30TH AVE. N. SAINT PETERSBURG, FL 33710
TEL: (727) 344–6254 FAX: (727) 381–6116
hhtp://WWW.MCLI.COM

SCALE: N/A
SHEET: N/A

UNLESS OTHERWISE SPECIFIED:
TOLERANCES
IN (INCHES) OR [mm] (MILLIMETERS)
FRACTIONS: ± 1/64
DECIMALS: ±.01 ±.005
ANGLE: ±1/2°

DRAWING TITLE: ELECTROMECHANICAL SWITCHES

PART NO. K45–3–LIS

DRAWN: Paiboon Luekhamhan DATE: 03–11–2009

APPROVED: T. Nguyen DATE: 03–11–2009

PROPRIETARY NOTICE:
THE INFORMATION IN THIS DRAWING IS PROPRIETARY AND SHALL NOT BE USED OR DISCLOSED WITHOUT WRITTEN PERMISSION FROM MICROWAVE COMMUNICATIONS LABORATORIES INC. (MCLI)

THIRD ANGLE PROJECTION

CAGE CODE: 0D2L5

SIZE: A REV: N/A

DO NOT SCALE THE DRAWING

DWG NO. 84272