REVISIONS				
ZONE	REV	DESCRIPTION	DATE	APPROVED

MECHANICAL
CONTACT: BREAK BEFORE MAKE
ACTUATOR: MOMENTARY
SWITCHING SPEED: 20 mSEC MAX

ELECTRICAL
ACTUATOR VOLTAGE: 28.0 Vdc (22.0–32.0 Vdc)
ACTUATOR CURRENT: 0.150 A MAX @ 28.0 Vdc
POWER HANDLING: 200 WCW @ 1.0 GHz

ENVIRONMENTAL
OPERATING TEMP: –54°C to +90°C
SINE VIBRATION: 30 G'S rms
LIFE : 1,000,000 CYCLES
RANDOM VIBRATION: 20 G'S rms

SPECIFICATION:

FREQUENCY RANGE (GHz):	DC–2.0	2.0–4.0	4.0–8.0	8.0–12.4	12.4–18.0
VSWR (Max.):	1.20:1	1.25:1	1.30:1	1.40:1	1.50:1
INSERTION LOSS (dB):	0.20	0.25	0.30	0.40	0.50
ISOLATION (dB):	90	80	80	70	60
IMPEDANCE (Ohms):	50				

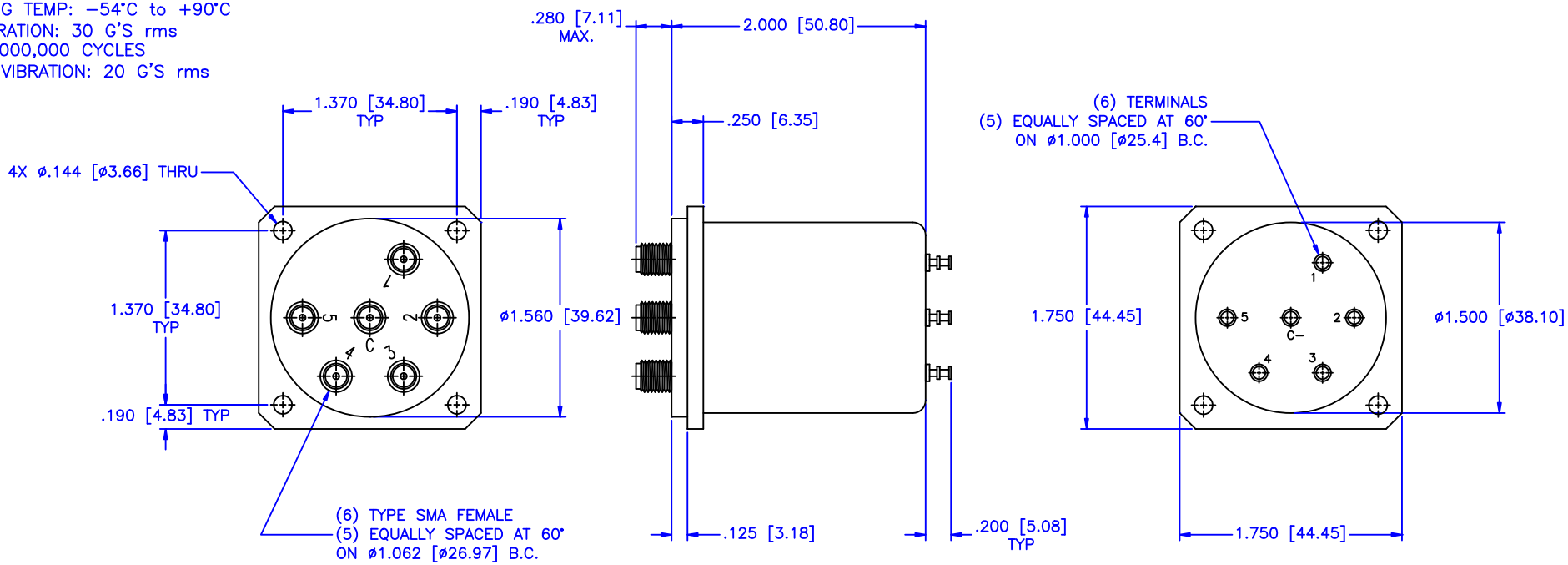

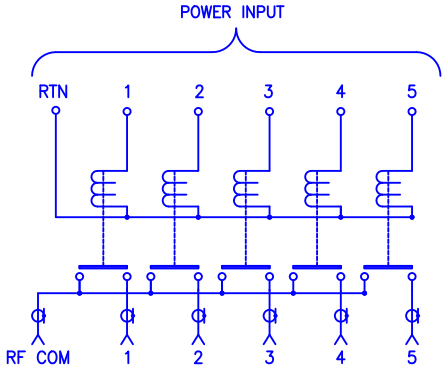

MATERIAL:	MCLI — MICROWAVE COMMUNICATIONS LABORATORIES INC. 7255 30TH AVE. N. SAINT PETERSBURG, FL 33710 TEL: (727) 344–6254 FAX: (727) 381–6116 hhtp://WWW.MCLI.COM	SCALE: N/A	SHEET: N/A
	UNLESS OTHERWISE SPECIFIED: TOLERANCES IN (INCHES) OR [mm] (MILLIMETERS) FRACTIONS: ± 1/64 DECIMALS: ±.01 ±.005 ANGLE: ±1/2°	DRAWING TITLE: ELECTROMECHANICAL SWITCHES	
		PART NO. A5–7–M	
DRAWN: Paiboon Luekhamhan	DATE: 02–08–2005	PROPRIETARY NOTICE: THE INFORMATION IN THIS DRAWING IS PROPRIETARY AND SHALL NOT BE USED OR DISCLOSED WITHOUT WRITTEN PERMISSION FROM MICROWAVE COMMUNICATIONS LABORATORIES INC. (MCLI)	CAGE CODE: 0D2L5
APPROVED: T. Nguyen	DATE: 02–08–2005	THIRD ANGLE PROJECTION	SIZE: N/A REV: N/A DO NOT SCALE THE DRAWING
			DWG NO. 82272