REVISIONS						
ZONE	REV			DESCRIPTION	DATE	APPROVED

MECHANICAL
CONTACT: BREAK BEFORE MAKE
ACTUATOR: LATCHING
SWITCHING SPEED: 20 mSEC MAX

ELECTRICAL
ACTUATOR VOLTAGE: 28.0±3.0 Vdc
ACTUATOR CURRENT: 0.250 A MAX @ 28.0 Vdc
POWER HANDLING: 100 WCW @ 1.0 GHz

ENVIRONMENTAL
OPERATING TEMP: −54°C to +90°C
SINE VIBRATION: 30 G'S rms
LIFE : 1,000,000 CYCLES
RANDOM VIBRATION: 20 G'S rms

SPECIFICATION:

FREQUENCY RANGE (GHz):	DC−1.0
VSWR (Max.):	1.20:1
INSERTION LOSS (dB):	0.20
ISOLATION (dB):	90
IMPEDANCE:	50 OHMS

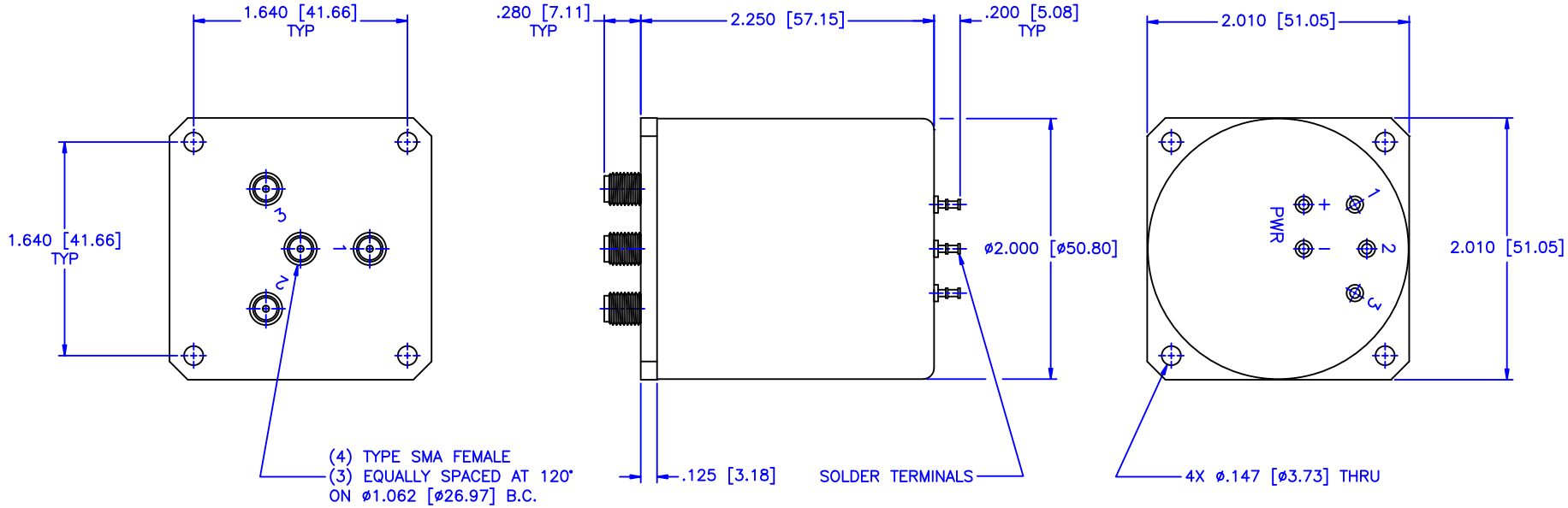

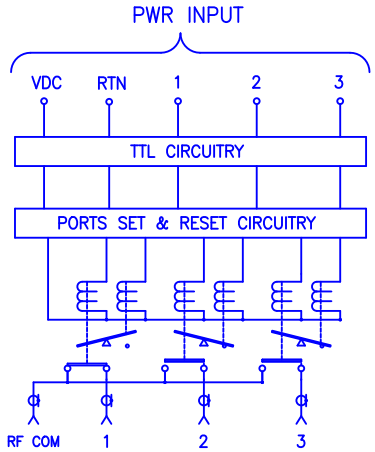

MATERIAL:

MCLI
MICROWAVE COMMUNICATIONS LABORATORIES INC.
7255 30TH AVE. N. SAINT PETERSBURG, FL 33710
TEL: (727) 344−6254 FAX: (727) 381−6116
hhtp://WWW.MCLI.COM

SCALE: N/A
SHEET: N/A

UNLESS OTHERWISE SPECIFIED:
TOLERANCES
IN (INCHES) OR [mm] (MILLIMETERS)
FRACTIONS: ± 1/64
DECIMALS: ±.01 ±.005
ANGLE: ±1/2°

DRAWING TITLE: ELECTROMECHANICAL SWITCHES

PART NO. 03−1−LL

DRAWN: Paiboon Luekhamhan DATE: 09−24−2003

APPROVED: T. Nguyen DATE: 09−24−2003

PROPRIETARY NOTICE:
THE INFORMATION IN THIS DRAWING IS PROPRIETARY AND SHALL NOT BE USED OR DISCLOSED WITHOUT WRITTEN PERMISSION FROM MICROWAVE COMMUNICATIONS LABORATORIES INC. (MCLI)

THIRD ANGLE PROJECTION

CAGE CODE: 0D2L5
SIZE: N/A
REV: N/A
DO NOT SCALE THE DRAWING
DWG NO. 82295