JYEBAO www.jyebao.com.tw

AL-A8S3	**SMA Jack To SMB Plug Right Angle** **50Ω**

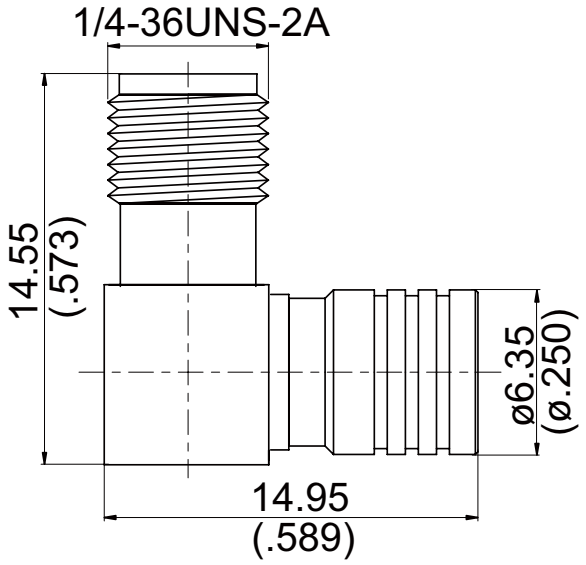

Typical VSWR

Part Number	1~3Ghz	4Ghz	5~7Ghz	8~9Ghz	10Ghz
AL-A8S3	1.06	1.1	1.15	1.28	1.32

Parts	Material	Plating (Micro-inch)
Cover	Brass	Gold 5 over Nickel 50 Over Copper 50
Retainer Ring	Beryllium Copper	Tin-Zinc-Copper-Alloy 100 Over Copper 50
Contact Pin(SMA)	Beryllium Copper	Gold 10 Over Nickel 50 Over Copper 50
Contact Pin(SMB)	Beryllium Copper	Gold 10 Over Nickel 50 Over Copper 50
Body(SMA)	Brass	Gold 5 over Nickel 50 Over Copper 50
Body(SMB)	Brass	Gold 5 over Nickel 50 Over Copper 50
Insulator	Teflon	

Weight: 3.64 g

This part number complies with RoHS.
Notice: JYEBAO reserves the right to make modifications deemed appropriate.