REV	DESCRIPTION	DATE	BY	APPVD	CHKD
A	ECO 115105	2/18/2011	MJM	RS	CCF

THIS DRAWING IS PROPRIETARY AND CONFIDENTIAL.

MECHANICAL CHARACTERISTICS

INTERFACE	PKZ 56 SERIES, SIZE 12 (PALCO)
SLANT SHEET	N/A
INSERTION FORCE (OUTER BODY)	1.5 LBS. MAX.
WITHDRAWL FORCE (OUTER BODY)	2.0 OZ. MIN.
INSERTION FORCE (INNER BODY)	14.0 OZ. MIN.
WITHDRAWL FORCE (INNER BODY)	0.5 OZ. MIN.
AXIAL CONTACT RETENTION	2 LBS. MIN.
DURABILITY	500 CYCLES MIN.
CABLE RETENTION	5 LBS. MIN.
MASS	MASS = N/A

ELECTRICAL CHARACTERISTICS

IMPEDANCE	50 Ohms NOM.
MAXIMUM FREQUENCY	3 GHz
VSWR DC - 1 GHz	1.045:1 MAX.
1 GHz - 3 GHz	TBS
INSERTION LOSS	0.06 √F (GHz)dB MAX.
DIELECTRIC WITHSTANDING VOLTAGE	250 Vrms MIN.
INSULATION RESISTANCE	5000 MegaOhms MIN.
RF LEAKAGE DC - 1 GHz	-90 dB MIN.
1 - 3 GHz	-65 dB MIN.
CORONA	95 Vrms MIN. @ 70,000 FEET
RF HIGH POTENTIAL	170 Vrms MIN.
CONTACT RESISTANCE (INNER)	6.0 MilliOhms MAX.
CONTACT RESISTANCE (OUTER)	4.0 MilliOhms MAX.

ENVIRONMENTAL CHARACTERISTICS

OPERATING TEMPERATURE	-55°C TO 125°C
VIBRATION	MIL-STD-202, METHOD 204, CONDITION D
MECHANICAL SHOCK	MIL-STD-202, METHOD 213, CONDITION I
THERMAL SHOCK	MIL-STD-202, METHOD 107, CONDITION B
MOISTURE RESISTANCE	MIL-STD-202, METHOD 106, CONDITION (NO VIBRATION)
CORROSION	MIL-STD-1344, METHOD 1001, CONDITION B

MATERIALS AND FINISH

CONTACTS & CONTACT RING	BERYLLIUM COPPER, PER ASTM-B-196, GOLD PLATED PER MIL-DTL-45204, OVER NICKEL PLATE PER AMS-QQ-N-290
BODIES	BRASS PER ASTM B16 GOLD PLATED PER MIL-DTL-45204, OVER NICKEL PLATE PER AMS-QQ-N-290
RETAINING SPRING	BERYLLIUM COPPER, PER ASTM-B-196, NICKEL PLATE PER AMS-QQ-N-290
INSULATOR	TFE FLUORCARBON PER ASTM-D-1710
DIELECTRIC STOP	POLYPHENYLENE SULFIDE (PPS) PER ASTM-D-6358
SUPPORT BEAD	NO. 1 VARY FLEX EPOXY RESIN, TYPE HV
CLAMP NUT	STEEL, CORROSION RESISTANT, PER ASTM-A-582, UNS NO. S30300, PASSIVATE PER ASTM-A-967

APPLICATION

CABLE(S)	UGF065D
INSTALLATION	PER CONFIGURATOR

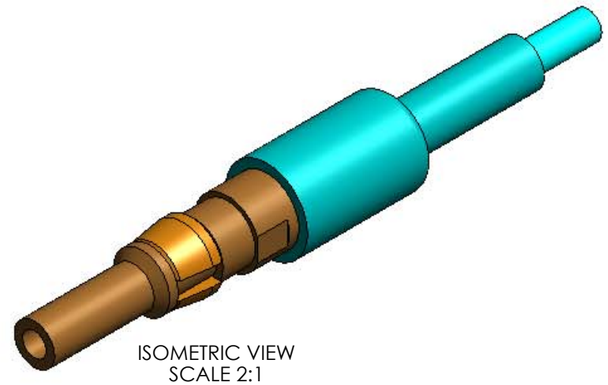

ISOMETRIC VIEW
SCALE 2:1

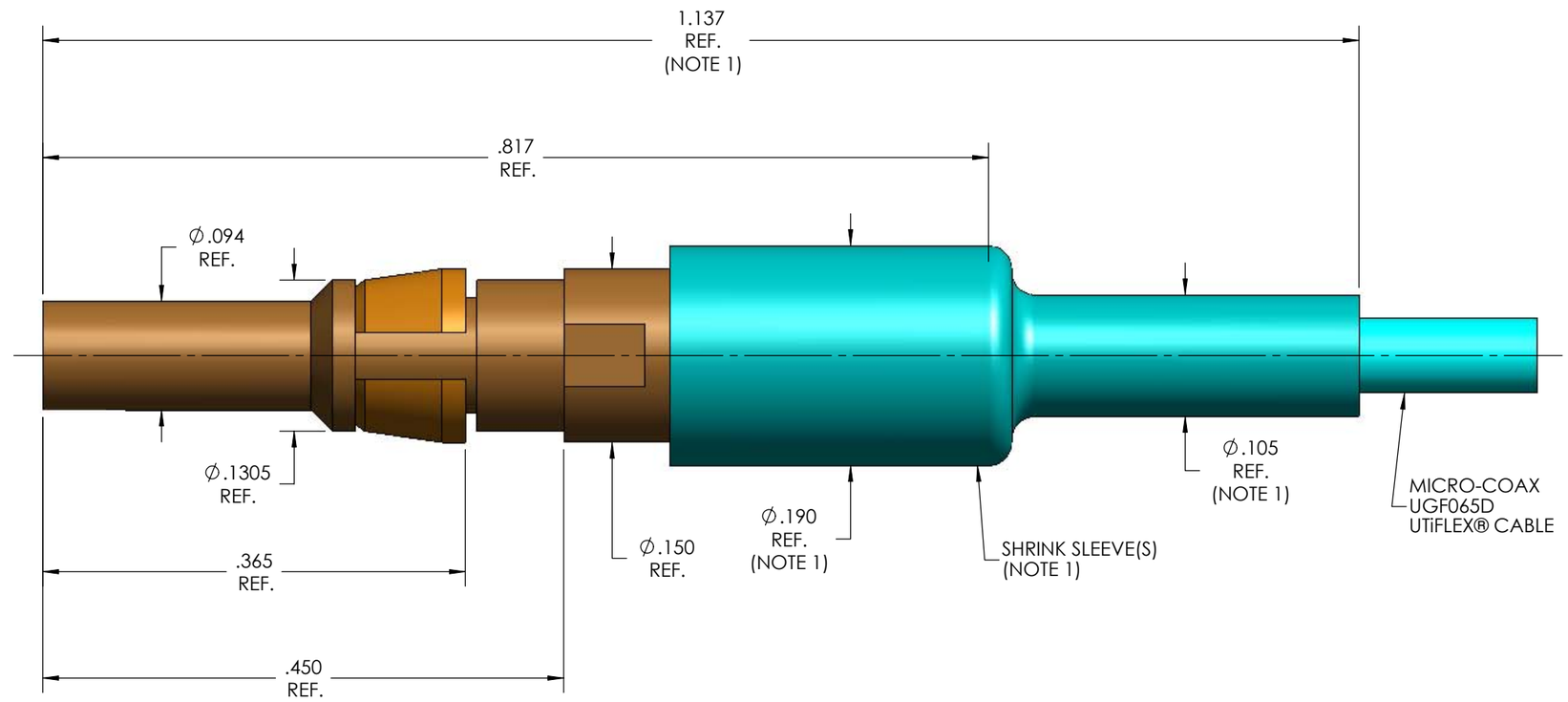

NOTE:

1. MARKER LOCATION ON THIS DRAWING IS FOR REFERENCE ONLY AND IS SUBJECT TO CHANGE WITHOUT NOTICE.

SPECIFICATION DRAWING

THIS SPECIFICATION IS THE PROPERTY OF MICRO-COAX, INC. AND MAY NOT BE USED OR COPIED WITHOUT THE EXPRESS WRITTEN PERMISSION OF MICRO-COAX, INC.

	INITIALS	DATE
DWN.	MJK	7/27/04
CHKD.	CCF	2/15/11
APPVD.		

MICRO-COAX®
Leading the way in transmission line solutions.
Copyright Micro-Coax, Inc.

TOLERANCES UNLESS OTHEWISE SPECIFIED	
.XX	± .02
.XXX	± .005
.XXXX	± .0010
ANGLES	±2°

TITLE: PKZ PLUG, UGF065D

ALL DIMENSIONS IN INCHES UNLESS OTHERWISE SPECIFIED. SCREW THDS. TO BE IN ACCORD WITH ANSI B1.1-1989.

FSCM NO.	SIZE	SCALE	SHEET NO.	DRAWING NO.	REV
64639	B	8:1	1 OF 1	SD904041	A