DWG NO.		REV.
OL-0910-111-1		C
PART NUMBER	BODY	CONTACT
0910-111-PJ	PASSIVATE	GOLD

PLATING PER SAN-TRON SPEC. 7.3.1-8

1.0 PERFORMANCE: (sea level)
1.1 FREQUENCY: DC-18 GHz
1.2 VSWR TYPICAL: (1.05, 3 GHz), (1.12, 11 GHz), (1.30, 18 GHz)
1.3 NOMINAL IMPEDANCE: 50 OHMS
1.4 VOLTAGE RATING: 12 Vrms
1.5 DWV: 500 Vrms @ 60 Hz
1.6 TEMPERATURE RANGE: -65/+165°C

2.0 MATERIALS: RoHS COMPLIANT
2.1 DIELECTRIC: PTFE
2.2 CONTACTS: BeCu
2.3 BODY: SS-303
2.4 COUPLING NUT: SS-303
2.5 RETAINING RING: C1060-C1090 STEEL
3.0 FINISH: SEE TABLE

4.0 MECHANICAL
4.1 INTERFACES PER MIL-STD-348
4.2 CONTACT RETENTION: 6 LBS MIN AXIAL
4.3 DURABILITY: 500 CYCLES

DO NOT SCALE DRAWING

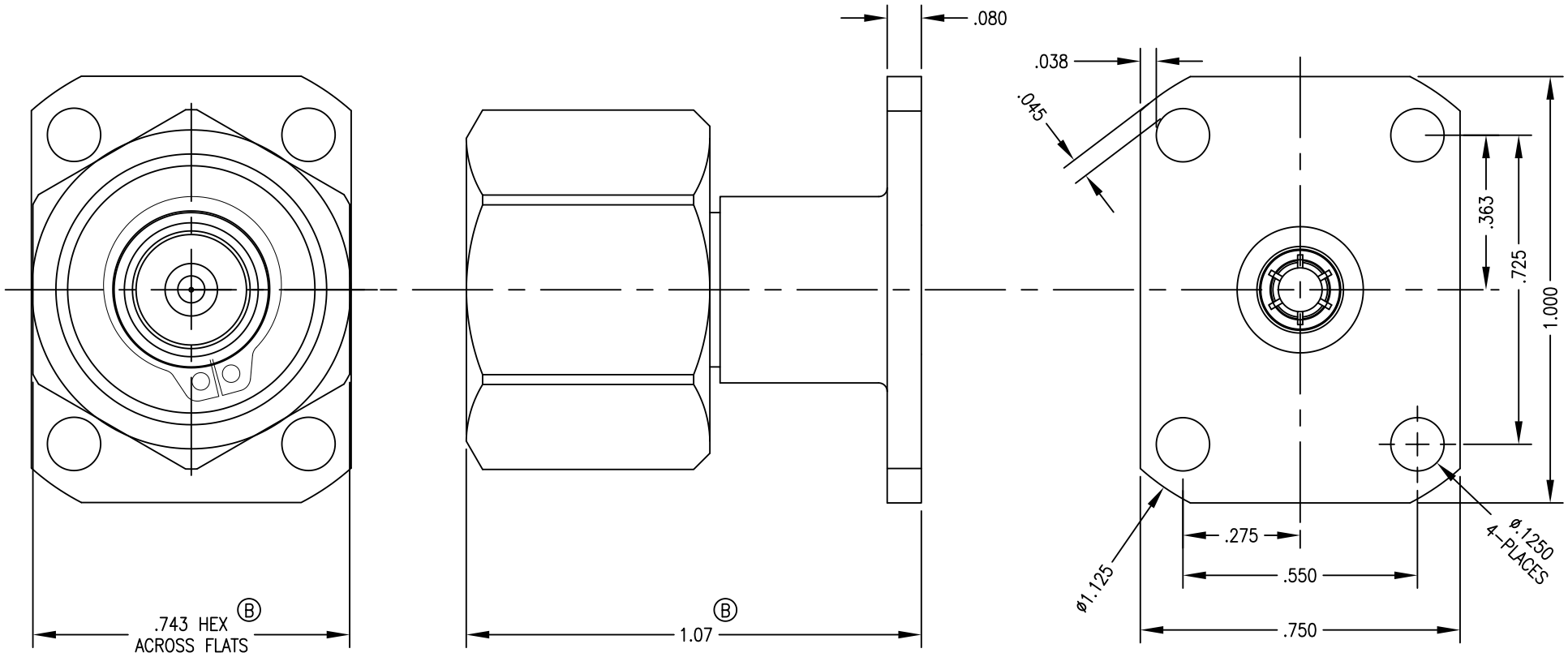

Rev.	Revisions	Disp.	Date	Dwn.	Appd.
C	FROM COMBI-NUT TO A STRAIGHT HEX	FIFO	10/5/11	FSH	FSH
B	C-NUT FLAT DIM CHG TO .743; CHG PRECISION- WAS 3 PL	IMP	12/9/10	PRS	FSH
A	ORIGINAL	NEW	11/30/10		

Ref.: SK-

REMOVE ALL BURRS AND SHARP EDGES .005 MAX.

INTERPRET PER ASME Y14.5M-1994

THIS DRAWING CONTAINS CONFIDENTIAL INFORMATION PROPRIETARY TO SAN-TRON, INC. IT MUST NOT BE REPRODUCED OR DISCLOSED TO OTHERS OR USED IN ANY OTHER WAY, IN WHOLE OR PART EXCEPT AS AUTHORIZED IN WRITING BY SAN-TRON, INC.

UNLESS OTHERWISE SPECIFIED:
ALL DIMENSIONS ARE IN INCHES.
ALL DIMENSIONS ARE AFTER PLATING.
.XXX= ±.005 ALL MACHINED SURFACES 64√ MAX.
.XX= ±.01 ANG.±1/2° FRACTIONAL= ±1/64
◎ .004 MAX. TIR. ⊥ AXIS .001

THIRD ANGLE PROJECTION

DWN	PRS	11/16/10
CHKD	SJS	11/29/10
APPR	FSH	11/30/10

SAN-TRON, INC.
4 NEWBURYPORT TPK. IPSWICH MA USA 01938
TEL: 978 - 356 -1585 FAX: 978 - 356 -1573
WWW. santron.com E MAIL: santron@santron.com

TITLE ADAPTER, N(M) - SMP(P) STRAIGHT, PANEL MOUNT

MATERIAL:

FINISH: SEE TABLE- ALLOW FOR .0002/.0004 PLATING

CAGE CODE: 50896

SCALE X:X

DWG NO. OL-0910-111-1 REV. C