PASTERNACK®
www.pasternack.com

50 Ohm 2 Watts Precision Passivated Stainless Steel TNC Male RF Load Up To 18 GHz

TECHNICAL DATA SHEET PE6089

50 Ohm 2 Watts Precision Passivated Stainless Steel TNC Male RF Load Up To 18 GHz

Configuration

RF Load Design	Precision
Connector	TNC Male
Connector Specification	MIL-C-39012
Heat Sink	Passivated Stainless Steel
Connection Method	Standard
Body Style	Straight

Electrical Specifications

Frequency Range, GHz	DC to 18
Impedance, Ohms	50
Maximum VSWR	1.25:1
Maximum Input Power, Watts	2

Mechanical Specifications

Temperature

Operating Range, deg C	-65 to +125

Size

Length, in [mm]	1.245 [31.62]
Width/Dia., in [mm]	0.625 [15.88]

Connector

Type	TNC Male
Inner Conductor Material and Plating	Brass/Beryllium Copper, Gold
Coupling Nut Material and Plating	Passivated Stainless Steel
Body Material and Plating	Passivated Stainless Steel
Dielectric Type	PTFE

Compliance Certifications (visit www.Pasternack.com for current document)

RoHS Compliant	Yes

Click the following link (or enter part number in “SEARCH” on website) to obtain additional part information including price, inventory and certifications: 50 Ohm 2 Watts Precision Passivated Stainless Steel TNC Male RF Load Up To 18 GHz PE6089

The information contained in this document is accurate to the best of our knowledge and representative of the part described herein. It may be necessary to make modifications to the part and/or the documentation of the part, in order to implement improvements. Pasternack reserves the right to make such changes as required. Unless otherwise stated, all specifications are nominal.

Pasternack Enterprises, Inc. • P.O. Box 16759, Irvine, CA 92623
Phone: (866) 727-8376 or (949) 261-1920 • **Fax:** (949) 261-7451
Sales@Pasternack.com • Techsupport@Pasternack.com

ISO 9001 : 2008 Registered

© 2013 Pasternack Enterprises All Rights Reserved

50 Ohm 2 Watts Precision Passivated Stainless Steel TNC Male RF Load Up To 18 GHz

Plotted and Other Data

Notes: Values at 25 °C, sea level

50 Ohm 2 Watts Precision Passivated Stainless Steel TNC Male RF Load Up To 18 GHz from Pasternack Enterprises has same day shipment for domestic and International orders. Our RF, microwave and fiber optic products maintain a 99% availability and are part of the broadest selection in the industry.

Click the following link (or enter part number in “SEARCH” on website) to obtain additional part information including price, inventory and certifications: 50 Ohm 2 Watts Precision Passivated Stainless Steel TNC Male RF Load Up To 18 GHz PE6089

URL: http://www.pasternack.com/2-watts-tnc-male-rf-load-up-to-18-ghz-precision-pe6089-p.aspx

The information contained in this document is accurate to the best of our knowledge and representative of the part described herein. It may be necessary to make modifications to the part and/or the documentation of the part, in order to implement improvements. Pasternack reserves the right to make such changes as required. Unless otherwise stated, all specifications are nominal.

Pasternack Enterprises, Inc. • P.O. Box 16759, Irvine, CA 92623
Phone: (866) 727-8376 or (949) 261-1920 • **Fax:** (949) 261-7451
Sales@Pasternack.com • Techsupport@Pasternack.com

ISO 9001 : 2008 Registered

© 2013 Pasternack Enterprises All Rights Reserved

PE6089 CAD Drawing

50 Ohm 2 Watts Precision Passivated Stainless Steel TNC Male RF Load Up To 18 GHz

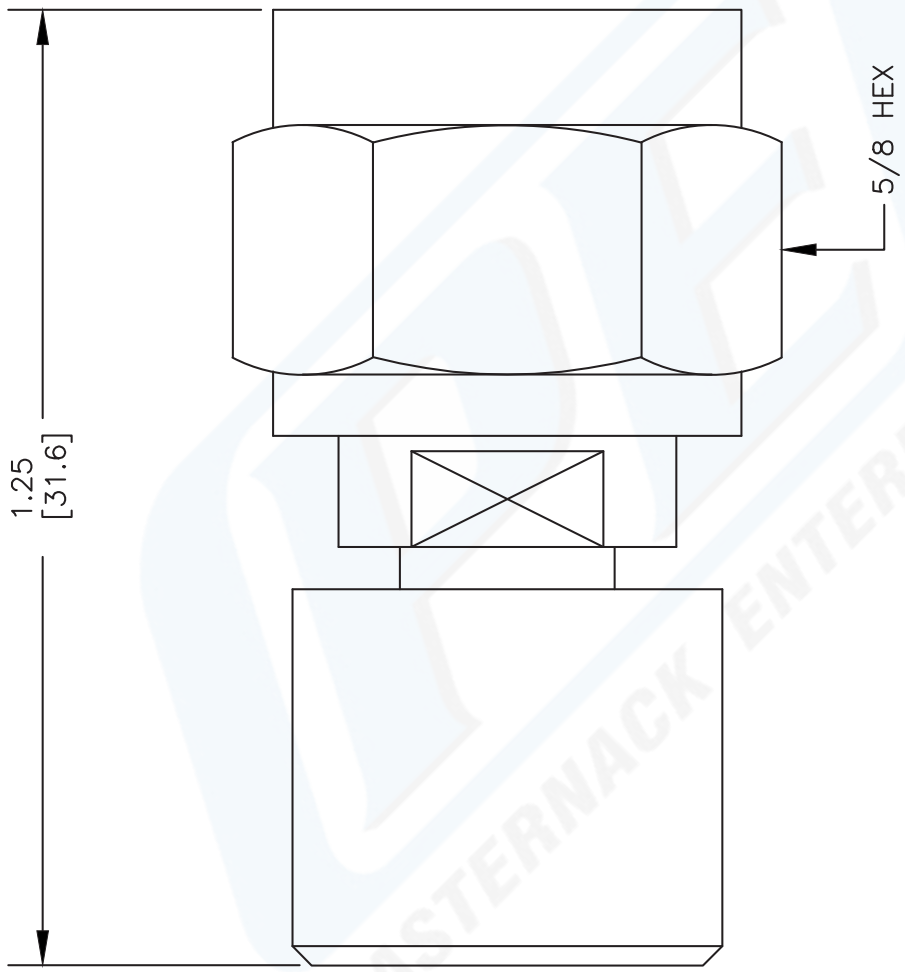

NOTES:
1. UNLESS OTHERWISE SPECIFIED ALL DIMENSIONS ARE NOMINAL.
2. ALL SPECIFICATIONS ARE SUBJECT TO CHANGE WITHOUT NOTICE AT ANY TIME.
3. DIMENSIONS ARE IN INCHES [mm].

DWG TITLE **PE6089**

CAD FILE 072202 | SCALE N/A | SIZE A | 127

FSCM NO. 53919

PASTERNACK®
Pasternack Enterprises, Inc.
P.O. Box 16759 | Irvine | CA | 92623
Phone: (949) 261-1920 | **Fax:** (949) 261-7451
Website: www.pasternack.com | **E-Mail:** sales@pasternack.com

© 2013 Pasternack Enterprises All Rights Reserved