REV.	DESCRIPTION	DATE	BY	APPVD
A	INITIAL RELEASE	12/10/04	SRS	LXT
A1	ECO 85490	8/6/2008	MJM	RS
B	ECO 105994	10/29/2010	MJM	MJR

THIS DRAWING IS PROPRIETARY AND CONFIDENTIAL.

MECHANICAL CHARACTERISTICS

INTERFACE	MIL-STD-348, FIGURE 402.1
SLANT SHEET	MIL-PRF-39012/1 REF.
RECOMMENDED MATING TORQUE	20 IN-LBS. NOM.
COUPLING PROOF TORQUE	25 IN-LBS. MIN.
COUPLING NUT RETENTION	100 LBS. MIN.
FORCE TO ENGAGE	6 IN-LBS. MAX.
FORCE TO DISENGAGE	6 IN-LBS. MIN.
DURABILITY	500 CYCLES MIN.
AXIAL CONTACT RETENTION (FROM INTERFACE)	6 LBS. MIN.
AXIAL CONTACT RETENTION (FROM CABLE)	6 LBS. MIN.
CABLE RETENTION	20 LBS. MIN.
MASS	37.96 GRAMS NOM.

ELECTRICAL CHARACTERISTICS

IMPEDANCE	50 Ohms NOM.
MAXIMUM FREQUENCY	18 GHz
VSWR DC - 18 GHz	1.16:1MAX.
INSERTION LOSS	0.045 $\sqrt{F}$ (GHz) dB MAX.
DIELECTRIC WITHSTANDING VOLTAGE	1775 Vrms MIN.
INSULATION RESISTANCE	5000 MegaOhms MIN.
RF LEAKAGE DC - 18 GHz	-90 dB MIN.
CORONA	450 Vrms MIN. @70,000 FEET
RF HIGH POTENTIAL	1175 Vrms MIN.
CONTACT RESISTANCE (INNER)	1.0 MilliOhms MAX.
CONTACT RESISTANCE (OUTER)	0.2 MilliOhms MAX.

ENVIRONMENTAL CHARACTERISTICS

OPERATING TEMPERATURE	-55°C TO 150°C
VIBRATION	MIL-STD-202, METHOD 204, CONDITION B
MECHANICAL SHOCK	MIL-STD-202, METHOD 213, CONDITION I
THERMAL SHOCK	MIL-STD-202, METHOD 107, CONDITION B
MOISTURE RESISTANCE	MIL-STD-202, METHOD 106, CONDITION (NO VIBRATION)
CORROSION	MIL-STD-202, METHOD 101, CONDITION B, 5%

MATERIALS AND FINISH

CONTACT	BERYLLIUM COPPER PER ASTM-B-196, GOLD PLATE PER MIL-DTL- 45204, OVER NICKEL PLATE PER QQ-N-290.
FORWARD BEAD	POLYETHERIMIDE THERMOPLASTIC PER ASTM-D-5205
BODY, SLEEVE, CLAMP NUT, & COUPLING NUT	STEEL, CORROSION RESISTANT, PER ASTM-A-582, UNS NO. S30300, PASSIVATE PER ASTM-A-967
SNAP RING	BERYLLIUM COPPER, PER ASTM-B-197
GASKET	SILICONE RUBBER PER ZZ-R-765
CONTACT RING	BRASS, PER ASTM-B-16, GOLD PLATE PER MIL-DTL-45204, OVER NICKEL PLATE PER QQ-N-290

APPLICATION

CABLE(S)	311 SERIES
INSTALLATION	PER CONFIGURATOR

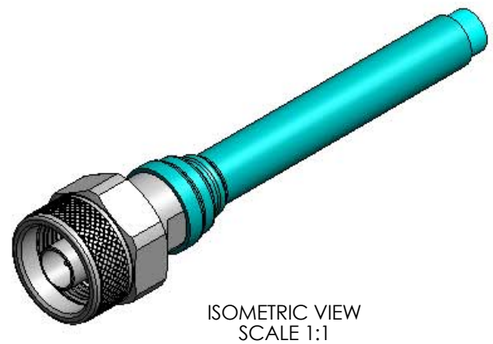

ISOMETRIC VIEW
SCALE 1:1

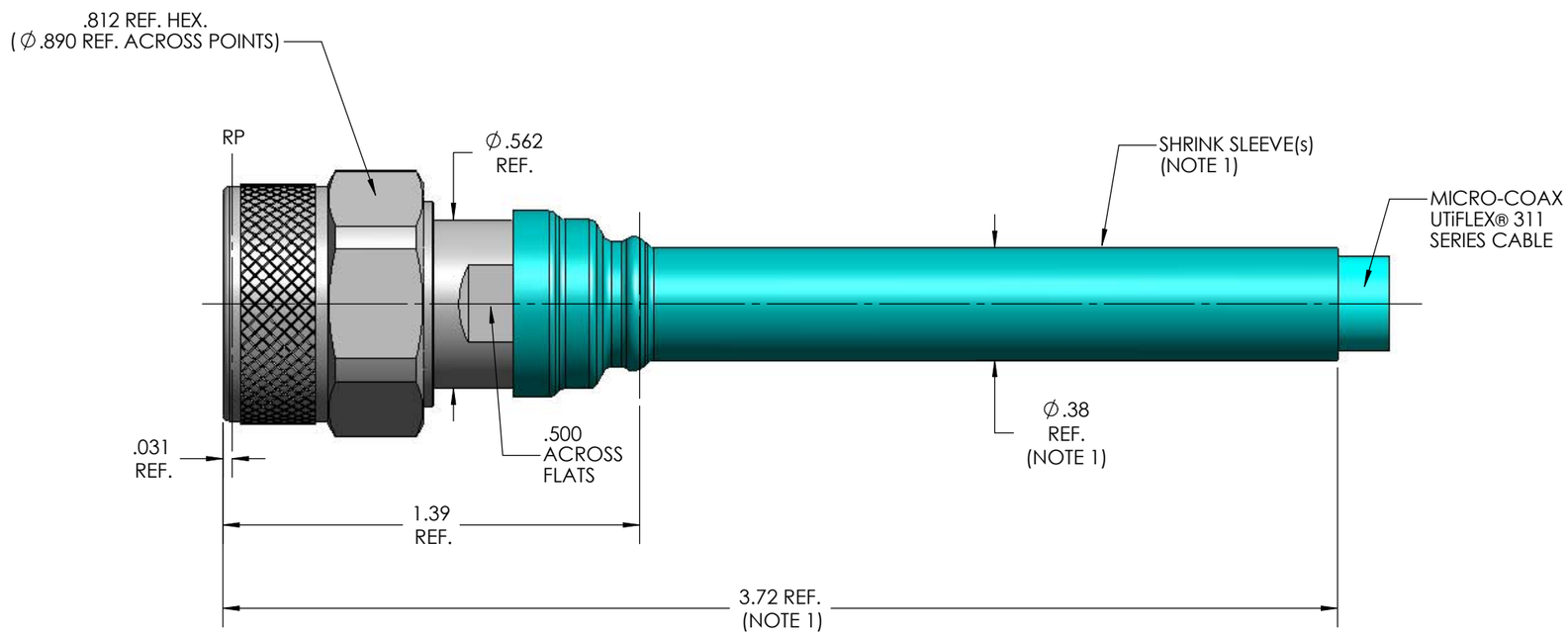

NOTE:

1. MARKER LOCATION ON THIS DRAWING IS FOR REFERENCE ONLY AND IS SUBJECT TO CHANGE WITHOUT NOTICE.

SPECIFICATION DRAWING

THIS SPECIFICATION IS THE PROPERTY OF MICRO-COAX, INC. AND MAY NOT BE USED OR COPIED WITHOUT THE EXPRESS WRITTEN PERMISSION OF MICRO-COAX, INC.

	INITIALS	DATE
DWN.	JMK	03/29/04
CHKD.	CCF	11/3/10
APPVD.		

MICRO-COAX®
Leading the way in transmission line solutions.
Copyright Micro-Coax, Inc.

TOLERANCES UNLESS OTHEWISE SPECIFIED	
.XX	± .02
.XXX	± .005
.XXXX	± .0010
ANGLES	± 2°

TITLE: N PLUG, PRECISION, 311 SERIES CABLE

ALL DIMENSIONS IN INCHES UNLESS OTHERWISE SPECIFIED. SCREW THDS. TO BE IN ACCORD WITH ANSI B1.1-1989.

FSCM NO.	SIZE	SCALE	SHEET NO.	DRAWING NO.	REV
64639	B	2:1	1 OF 1	SD904042	B