1.0 PERFORMANCE (sea level)
1.1 FREQUENCY RANGE: DC–20 GHz
1.2 NOMINAL IMPEDANCE: 50 OHMS
1.3 DWV: 750 Vrms @ 60 Hz
1.4 TEMPERATURE RANGE: –65/+165°C
1.5 PIM: –153 dBc (–AG ONLY)

2.0 MATERIALS (RoHS/REACH)
2.1 CONTACTS: BeCu
2.2 BODY: BRASS
2.3 DIELECTRIC: PTFE
2.4 CRIMP FERRULE: Cu (OPTIONAL)
2.5 LOCKWASHER: PHOSPHOR BRONZE

3.0 FINISH: SEE TABLE
4.0 MECHANICAL
4.1 INTERFACE REF MIL–STD–348
4.2 CONTACT RETENTION: 6 LBS AXIAL
4.3 MATING TORQUE: 6–10 IN*LBS
4.4 DURABILITY: 100 CYCLES
4.5 CABLE ASSEMBLY INSTRUCTIONS
CA–9967 eSERIES

DWG NO. OL–1205–06–1 REV. C

	PART NUMBER	BODY	CONTACT
PIM	1205–06–AG	ALBALOY	GOLD/Cu
ALTERNATIVE	1205–06–VJ	GOLD	GOLD/Ni

PLATING PER SAN–TRON SPEC. 7.3.1–8

DO NOT SCALE DRAWING

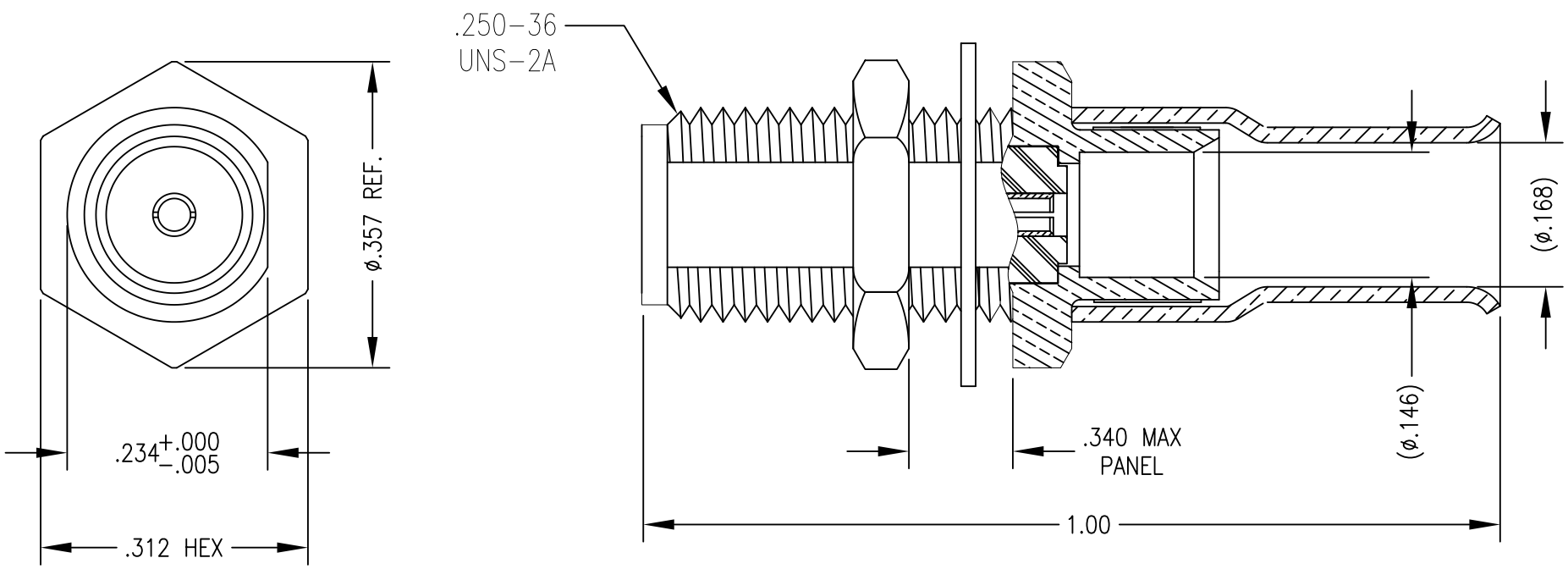

Rev.	Revisions	Disp.	Date	Dwn.	Appd.
C	ADD PIM PERFORMANCE	MIX	9/23/11	FSH	FSH
B	UPDATED GEOMETRY	NEW	11/21/07	JTH	FSH
A	RELEASE	NEW	11/20/07		

Ref.: SK–

REMOVE ALL BURRS AND SHARP EDGES .005 MAX.

INTERPRET PER ASME Y14.5M–1994

THIS DRAWING CONTAINS CONFIDENTIAL INFORMATION PROPRIETARY TO SAN–TRON, INC. IT MUST NOT BE REPRODUCED OR DISCLOSED TO OTHERS OR USED IN ANY OTHER WAY, IN WHOLE OR PART EXCEPT AS AUTHORIZED IN WRITING BY SAN–TRON, INC.

UNLESS OTHERWISE SPECIFIED:
ALL DIMENSIONS ARE IN INCHES.
ALL DIMENSIONS ARE AFTER PLATING.
.XXX= ±.005 ALL MACHINED SURFACES 32 MAX.
.XX= ±.01 ANG.±1/2° FRACTIONAL= ±1/64
◎ .004 MAX. TIR. ⊥ AXIS .001

THIRD ANGLE PROJECTION

DWN	JTH	11/16/07
CHKD	SJS	11/19/07
APPR	FSH	11/20/07

SAN-TRON, INC.
4 NEWBURYPORT TPK. IPSWICH MA USA 01938
TEL: 978 - 356 -1585 FAX: 978 - 356 -1573
WWW. santron.com E MAIL: santron@santron.com

TITLE eSMA, BULKHEAD JACK, DIRECT SOLDER FOR T–FLEX 402

MATERIAL: SEE NOTE 2.0

FINISH: SEE TABLE

CAGE CODE: 50896

SCALE X:X

DWG NO. OL–1205–06–1 REV. C