MECHANICAL
CONTACT: BREAK BEFORE MAKE
ACTUATOR: MOMENTARY
SWITCHING SPEED: 20 mSEC MAX

ELECTRICAL
ACTUATOR VOLTAGE: 28.0 Vdc (22.0–32.0 Vdc)
ACTUATOR CURRENT: 0.150 A MAX @ 28.0 Vdc
POWER HANDLING: 200 WCW @ 1.0 GHz

ENVIRONMENTAL
OPERATING TEMP: –54°C to +90°C
SINE VIBRATION: 30 G'S rms
LIFE : 1,000,000 CYCLES
RANDOM VIBRATION: 20 G'S rms

SPECIFICATION:

| FREQUENCY RANGE (GHz): | DC–2.0 | 2.0–4.0 | 4.0–8.0 | 8.0–12.4 | 12.4–18.0 | 18.0–26.5 |
|---|---|---|---|---|---|---|
| VSWR (Max.): | 1.20:1 | 1.25:1 | 1.30:1 | 1.40:1 | 1.50:1 | 1.60:1 |
| INSERTION LOSS (dB): | 0.20 | 0.25 | 0.30 | 0.40 | 0.50 | 0.70 |
| ISOLATION (dB): | 90 | 80 | 80 | 70 | 60 | 50 |
| IMPEDANCE (Ohms): | 50 | | | | | |

| REVISIONS | | | | |
|---|---|---|---|---|
| ZONE | REV | DESCRIPTION | DATE | APPROVED |

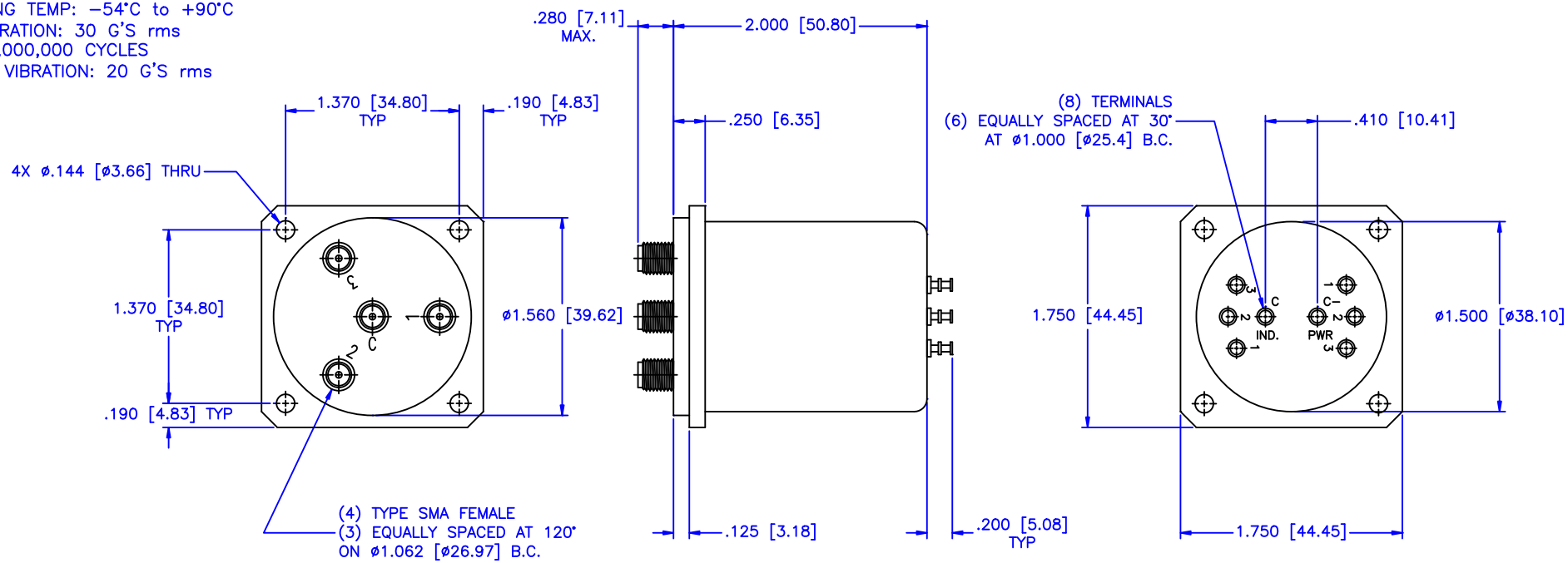


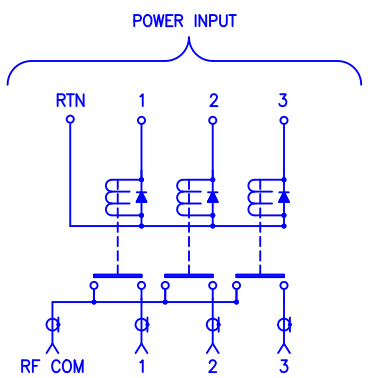


MATERIAL:

DRAWN: Paiboon Luekhamhan — DATE: 03-26-2006

APPROVED: T. Nguyen — DATE: 03-26-2001

MCLI
MICROWAVE COMMUNICATIONS LABORATORIES INC.
7255 30TH AVE. N. SAINT PETERSBURG, FL 33710
TEL: (727) 344-6254 FAX: (727) 381-6116
hhtp://WWW.MCLI.COM

UNLESS OTHERWISE SPECIFIED:
TOLERANCES
IN (INCHES) OR [mm] (MILLIMETERS)
FRACTIONS: ± 1/64
DECIMALS: ±.01 ±.005
ANGLE: ±1/2°

PROPRIETARY NOTICE:
THE INFORMATION IN THIS DRAWING IS PROPRIETARY AND SHALL NOT BE USED OR DISCLOSED WITHOUT WRITTEN PERMISSION FROM MICROWAVE COMMUNICATIONS LABORATORIES INC. (MCLI)

THIRD ANGLE PROJECTION

SCALE: N/A
SHEET: N/A

DRAWING TITLE: ELECTROMECHANICAL SWITCHES

PART NO. A3-8-MS

CAGE CODE: 0D2L5
SIZE: N/A
REV: N/A
DO NOT SCALE THE DRAWING
DWG NO. 81611