SECURITY CLASSIFICATION

SERVICE DRAWING NUMBER

USED ON

3RD ANGLE PROJECTION

DRAWING TO BE READ IN CONJUNCTION WITH BS 308

MESL microwave

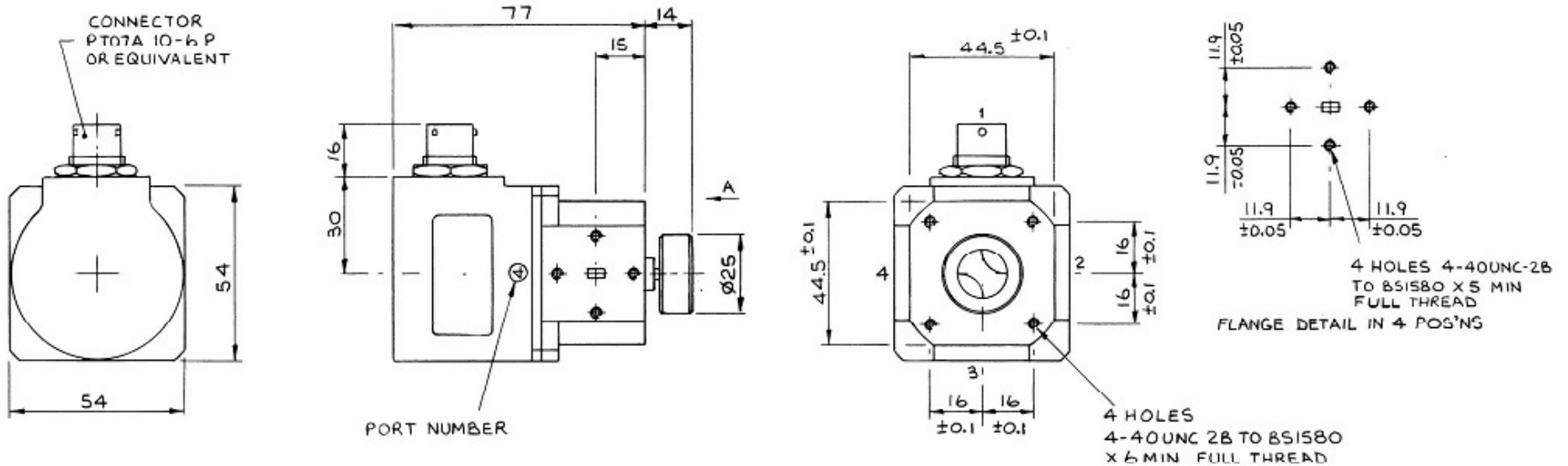

SPECIFICATION

FREQUENCY RANGE	33 TO 50 GHZ
ISOLATION	60dB MIN
INSERTION LOSS	0·05dB MAX
V.S.W.R.	1·1 : 1 MAX
POWER RATING	15 KW PEAK
OPERATION	AUTOMATIC
SUPPLY	28V DC ±10% 2A NOMINAL AT 25°C
TIME BETWEEN CONSECUTIVE OPERATIONS	GREATER THAN 1 SEC
SWITCHING SPEED	50mS MAX
TEMPERATURE RANGE	-40°C TO +85°C OPERATING
MATING FLANGE (BASIC)	UG 383/U

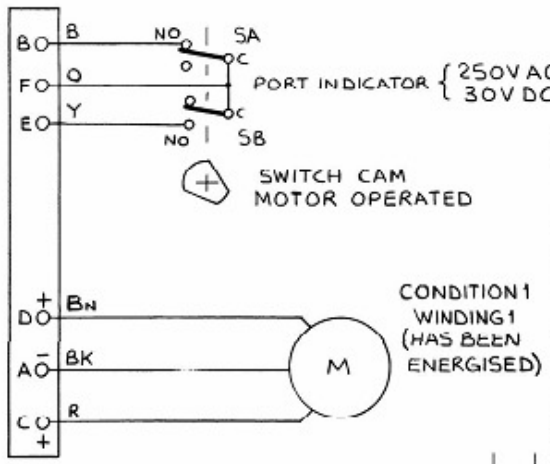

CONDITION	28V POWER + PIN	28V POWER − PIN	PORT REFERENCE IN DIRECTION OF ARROW A	AUXILIARY CIRCUIT CONNECTED PIN	AUXILIARY CIRCUIT CONNECTED PIN
1	D	A	1 4 2 3	F	B
2	C	A	1 4 2 3	F	E

REF.	FEATURE SIZE	NO.OFF	CHARACTER	POS. TOL.	ISSUE	DATE	MOD. No.
					A		DRN3387

D.A. DATE

PROD. REL. DATE

ENG. APP. DATE

CHECKED DATE

DRAWN A.W. DATE

ORIGINAL SCALE 1:1 DO NOT SCALE PRINT

DIMENSIONS IN m.m.

CERTIFICD AT ISSUE

MATERIAL: SWITCH BODY ALUMINIUM ALLOY

PROTECTIVE FINISH: STATOR ALOCROM 1200

GENERAL TOLERANCE UNLESS OTHERWISE STATED ±0.5

FINISH TO BE UNLESS OTHERWISE STATED

MESL MICROWAVE

RESPONSIBLE AUTHORITY

TITLE: OUTLINE DRG ROTARY SWITCH MWS 23-42 NT2/P/O

SECURITY CLASSIFICATION

CONTRACTORS DRAWING NUMBER

SHEET 1 OF 1 SHEETS

A2/6551

SERVICE DRAWING NUMBER