THIRD ANGLE PROJ.

REVISIONS				
REV	DESCRIPTION	DATE	ECO	APPR
E	ADDED SHEET 2	6/19/13	49587	CPM
F	INTERNAL DOCUMENT CHANGE ONLY	7/16/13	49632	RLB

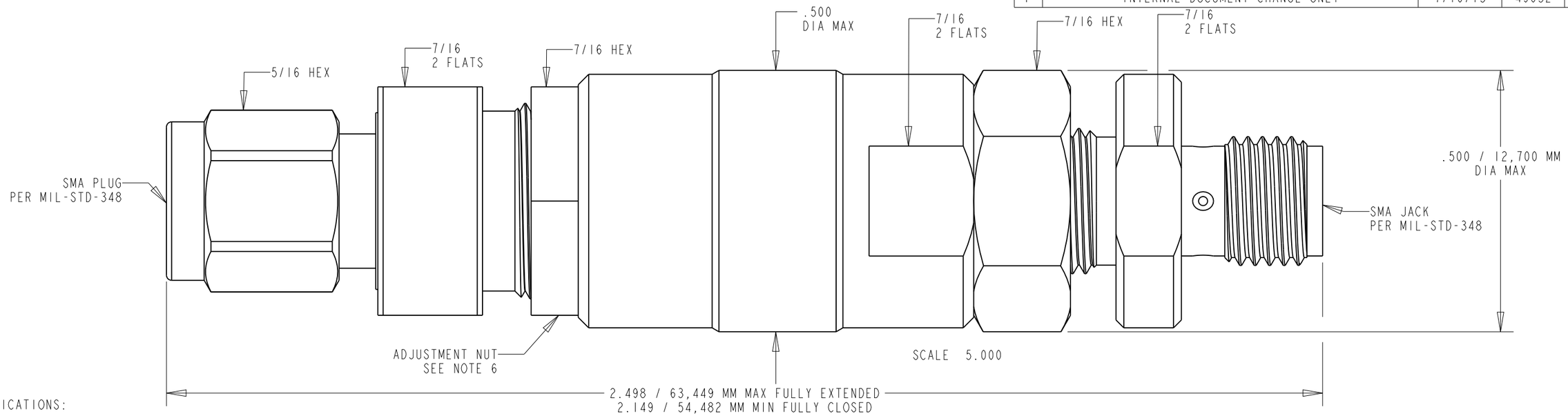

SPECIFICATIONS:

ELECTRICAL:
1. IMPEDANCE, 50 ohms
2. FREQUENCY RANGE, DC-18 GHz.
3. INSERSTION LOSS, dB MAX. = .1 SQRT(F(GHz))
4. VSWR, 4 GHz = 1.10 VSWR MAX.
10 GHz = 1.15 VSWR MAX.
12 GHz = 1.22 VSWR MAX.
16 GHz = 1.26 VSWR MAX.
18 GHz = 1.30 VSWR MAX.
5. PHASE ANGLE ADJUSTMENT RANGE IN DEGREES, 0° TO [10 X F(GHz)]° MAX
6. PHASE ANGLE CHANGE PER REVOLUTION OF ADJUSTMENT NUT IN DEGREES, [0.636 X F(GHz)]°
7. VOLTAGE RATING, 500 Vrms PEAK

MECHANICAL:
8. MATING, MATING FACE DIMENSIONS COMPATIBLE WITH THE MATING REQUIREMENTS OF MIL-C-39012/55 (TYPE SMA)
9. CONNECTOR DURABILITY, (SMA INTERFACE) 500 CYCLES OF MATING AND UNMATING WITHOUT DETERIORATION

MATERIAL:
10. CENTER CONTACT, BERYLLIUM COPPER, GOLD PLATED
11. CONNECTOR BODY, BRASS OR BERYLLIUM COPPER, GOLD PLATED
12. ADJUSTING NUTS AND LOCKING NUTS, BRASS, NICKEL PLATED
13. CONNECTOR COUPLING NUT, STAINLESS STEEL, PASSIVATED
14. INSULATION, TFE

ENVIRONMENTAL:
15. SHOCK, MIL-STD. 202 METHOD 213 (TEST COND. I)
16. VIBRATION, MIL-STD. 202 METHOD 204 (TEST COND. D)
17. CORROSION, MIL-STD. 202 METHOD 101 (TEST COND. B)
18. TEMPERATURE RANGE, -65 °C TO +125 °C

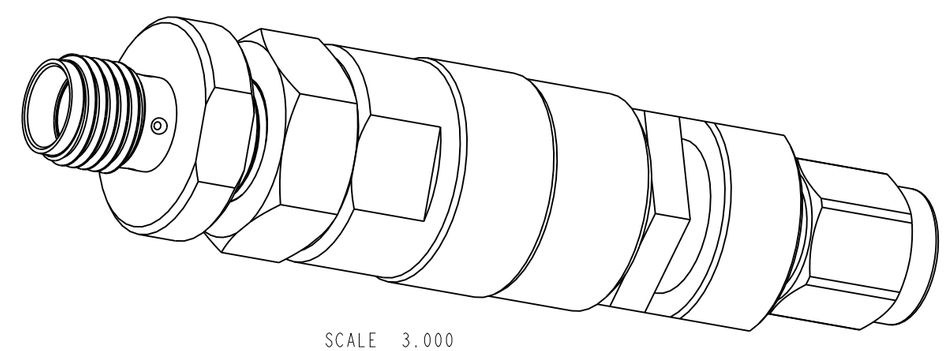

SCALE 3.000

CUSTOMER OUTLINE DRAWING

ALL OTHER SHEETS ARE FOR INTERNAL USE ONLY

UNLESS OTHERWISE SPECIFIED, DIMENSIONS ARE IN METRIC AND TOLERANCES ARE:

<0.5mm	0.5 - 6mm	6 - 30mm	30 - 120mm	ANGLES
± 0.05mm	±0.1mm	±0.2mm	± 0.3mm	±1°

NOTICE - These drawings, specifications, or other data (1) are, and remain the property of Amphenol corp. (2) must be returned upon request; and (3) are confidential and not to be disclosed to any person other than those to whom they are given by Amphenol Corp. the furnishing of these drawings, specifications, or other data by Amphenol Corp., or to any other person to anyone for any purpose is not to be regarded by implication or otherwise in any manner licensing, granting rights to permitting such holder or any other person to manufacture, use or sell any product, process or design, patented or otherwise, that may in any way be related to or disclosed by said drawings, specifications, or other data.

MATERIAL

REFERENCE
RAYTHEON / ARMY
11459703

FINISH

DRAWN R. BIERASINSKI	DATE 05-Jun-13	
ENGINEER S. PUGNER	DATE 02-MAR-87	
APPROVED K. CAPOZZI	DATE 6/19/13	
CAD FILE		

TITLE
PHASE ADJUSTABLE ADAPTOR - SMA MALE TO SMA FEMALE

SCALE: 1.0:1.0 | SHEET 2 OF 2

DWG SIZE B | REV F

Amphenol RF
www.amphenolrf.com

DRAWING NO. 901-508-2
ITEM NO. 901-508-2
PART NO. 901-508-2