THIS DRAWING IS PROPRIETARY AND CONFIDENTIAL.

REV	DESCRIPTION	DATE	BY	APPVD	CHKD
A	INITIAL RELEASE - RDCR 117013	8/1/2012	MJM	MJR	MJR

MECHANICAL CHARACTERISTICS

INTERFACE	MIL-STD-348, FIGURE 310-1
IN ACCORDANCE WITH THE INTENT OF SLANT SHEET	MIL-PRF-39012/56 REF.
RECOMMENDED MATING TORQUE	9 IN-LBS. NOM.
COUPLING PROOF TORQUE	15 IN-LBS. MIN.
COUPLING NUT RETENTION	60 LBS. MIN.
FORCE TO ENGAGE	2 IN-LBS. MAX.
FORCE TO DISENGAGE	2 IN-LBS. MIN.
DURABILITY	500 CYCLES MIN.
AXIAL CONTACT RETENTION (FROM INTERFACE)	6 LBS. MIN.
AXIAL CONTACT RETENTION (FROM CABLE)	6 LBS. MIN.
CABLE RETENTION	10 LBS. MIN.
MASS	11.13 GRAMS NOM.

ELECTRICAL CHARACTERISTICS

IMPEDANCE	50 Ohms NOM.
MAXIMUM FREQUENCY	18 GHz
VSWR DC - 18 GHz	1.16:1 MAX.
INSERTION LOSS	0.04 $\sqrt{F}$ (GHz) dB MAX.
DIELECTRIC WITHSTANDING VOLTAGE	900 Vrms MIN.
INSULATION RESISTANCE	5000 MegaOhms MIN.
RF LEAKAGE DC - 18 GHz	-90 dB MIN.
CORONA	240 Vrms MIN. @ 70,000 FEET
RF HIGH POTENTIAL	600 Vrms MIN.
CONTACT RESISTANCE (INNER)	4.0 MilliOhms MAX.
CONTACT RESISTANCE (OUTER)	2.0 MilliOhms MAX.

ENVIRONMENTAL CHARACTERISTICS

OPERATING TEMPERATURE	-62°C TO 165°C
VIBRATION	MIL-STD-202, METHOD 204, CONDITION D
MECHANICAL SHOCK	MIL-STD-202, METHOD 213, CONDITION I
THERMAL SHOCK	MIL-STD-202, METHOD 107, CONDITION B
CORROSION	MIL-STD-202, METHOD 101, CONDITION B, 5%
MOISTURE RESISTANCE	MIL-STD-202, METHOD 106, CONDITION (NO VIBRATION)

MATERIALS AND FINISH

BODY, REAR BODY. CLAMP NUT & COUPLING NUT	STEEL, CORROSION RESISTANT, PER ASTM-A-582, UNS NO. S30300, PASSIVATE PER ASTM-A-967
CONTACTS	BERYLLIUM COPPER, ASTM-B-196, GOLD PLATED PER MIL-DTL-45204, OVER NICKEL PLATE PER AMS-QQ-N-290
SNAP RING	BERYLLIUM COPPER, PER ASTM-B-197
INSULATORS	TFE FLUOROCARBON PER ASTM-D-1710
DIELECTRIC BEAD & DIELECTRIC STOP	POLYETHERIMIDE THERMOPLASTIC PER ASTM-D-5205
GASKET	SILICONE RUBBER PER ZZ-R-765
CONTACT RING	BRASS PER ASTM-B-16 GOLD PLATE PER MIL-DTL-45204, OVER NICKEL PLATE PER QQ-N-290

APPLICATION

CABLE(S)	UFA147A/B SERIES CABLE
INSTALLATION	PER CONFIGURATOR

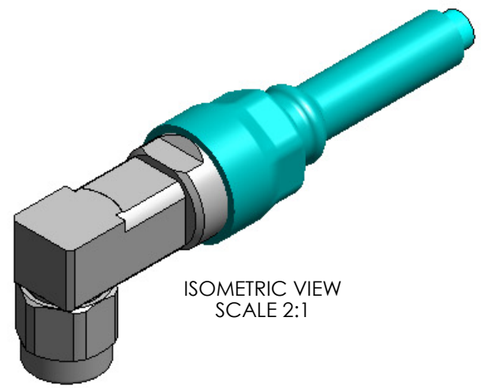

ISOMETRIC VIEW
SCALE 2:1

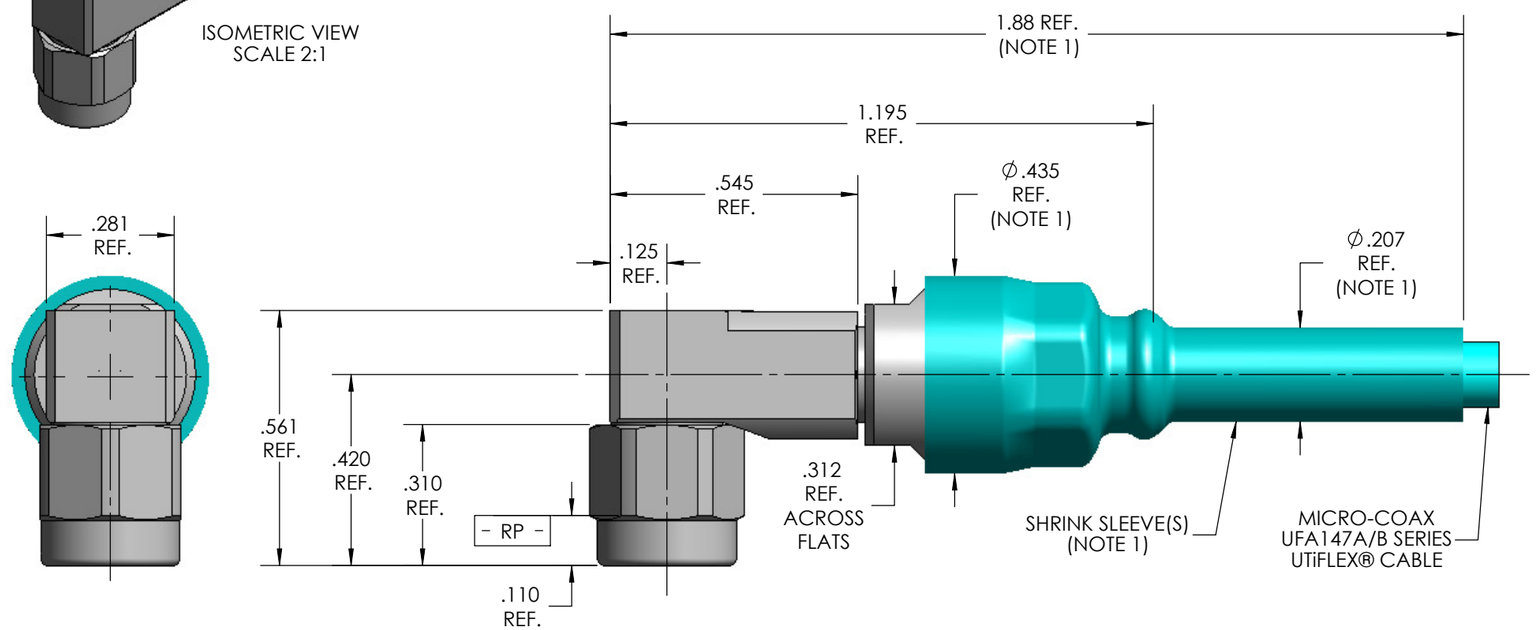

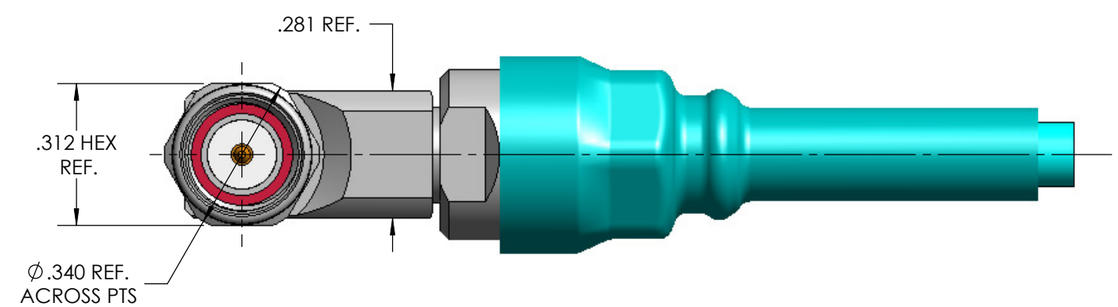

SPECIFICATION DRAWING

NOTE:

1. MARKER LOCATION ON THIS DRAWING IS FOR REFERENCE ONLY AND IS SUBJECT TO CHANGE WITHOUT NOTICE.

THIS SPECIFICATION IS THE PROPERTY OF MICRO-COAX, INC. AND MAY NOT BE USED OR COPIED WITHOUT THE EXPRESS WRITTEN PERMISSION OF MICRO-COAX, INC.

	INITIALS	DATE
DWN.	MJM	8/16/11
CHKD.	MJM	8/16/11
APPVD.		

MICRO-COAX®
Leading the way in transmission line solutions.
Copyright Micro-Coax, Inc.

TOLERANCES UNLESS OTHEWISE SPECIFIED	
.XX	± .02
.XXX	± .005
.XXXX	± .0010
ANGLES	± 2°

TITLE: SMA PLUG MITER RIGHT ANGLE, UFA147A/B SERIES CABLE

ALL DIMENSIONS IN INCHES UNLESS OTHERWISE SPECIFIED. SCREW THDS. TO BE IN ACCORD WITH ANSI B1.1-1989.

FSCM NO.	SIZE	SCALE	SHEET NO.	DRAWING NO.	REV
64639	B	3:1	1 OF 1	SD905130	A