SERVICE DRAWING NUMBER	3rd ANGLE PROJECTION	THIS DRAWING IS MESL MICROWAVE PROPERTY IT MAY NOT BE COPIED OR EXHIBITED WITHOUT WRITTEN PERMISSION	MESL MICROWAVE
SECURITY CLASSIFICATION	DRAWING TO BE READ IN CONJUNCTION WITH BS 8888		

NOTES :
1. THIS UNIT IS ROHS COMPLIANT BY DESIGN.

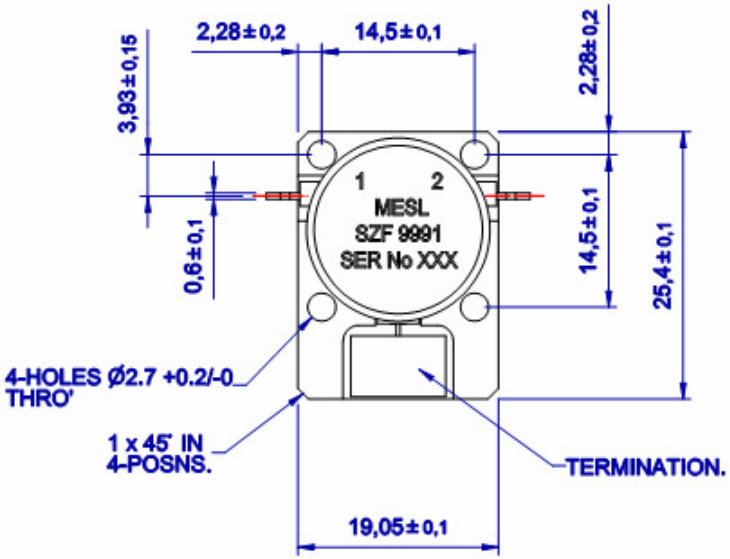

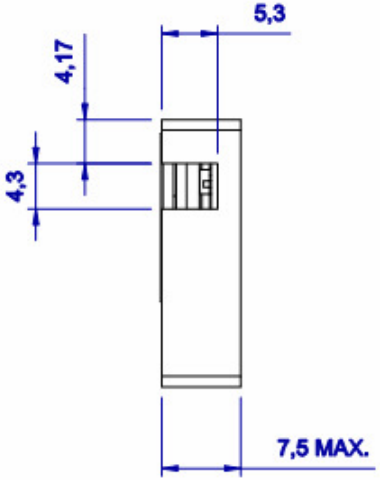

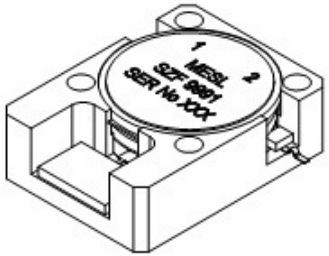

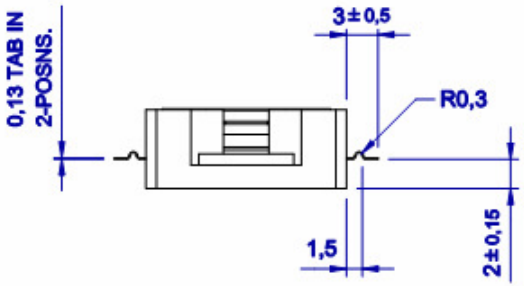

ELECTRICAL SPECIFICATIONS :

FREQUENCY RANGE:	2495-2700 MHz.
RETURN LOSS:	20 dB MIN ON FULL TEMP. RANGE.
ISOLATION:	23dB @ ROOM TEMP. / 20 dB ON FULL TEMP. RANGE.
INSERTION LOSS:	0.3 dB MAX 0N ROOM TEMP. 0.4 dB MAX ON FULL TEMP. RANGE
OPERATING TEMP. RANGE:	-40°C to +85°C
STORAGE TEMP. RANGE:	-40°C to +85°C
POWER (FORWARD - CW):	60 W.
(FORWARD- PEAK):	800 W.
(REVERSE-CW):	60 W @ 100mSec MAX.
INTERMODULATION : REQUIREMENT	FOR TWO CW SIGNALS 34 dBm EACH,SPACED 1 MHz, THE INTERMODULATION PRODUCTS SHALL NOT EXCEED - 65dBc.

Q.A.	
DATE	
PROD.REL.	
DATE	
ENG.APP.	
DATE	
MECH. ENG.	
DATE	
DRAWN	
DATE	

LIGHTLY REMOVE ALL BURRS AND SHARP EDGES U.O.S.

REF	DESCRIPTION	No OFF	CHAR.	POS.TOL.	ISSUE	DATE	MOD NUMBER
					C		DRN 9991

RED (Developemnt Only) — A 3

ORIGINAL SCALE 2/1 DO NOT SCALE PRINT	MATERIAL	SPECIFICATION	GENERAL TOLERANCE UNLESS OTHERWISE STATED ISO 2768-fH Symmetry ± 0,05	CONTRACTOR MESL MICROWAVE	SECURITY CLASSIFICATION
DIMENSION IN mm				RESPONSIBLE AUTHORITY	CONTRACTORS DRAWING NUMBER 9991-000-OL
CERTIFIED AT ISSUE	FINISH BODY : BRIGHT NICKEL PLATED.	SPECIFICATION	FINISH TO BE 1.6 UNLESS OTHERWISE STATED	TITLE 2495-2700MHz D/IN ISOLATOR Wi max (CW) OUTLINE SZF 9991	SERVICE DRAWING NUMBER / SHEET No 1 OFF 1