56 to 86MHz – Coaxial Isolator

Design Features

- Can be dual junction even three for high isolation.
- High RF performance, ultra-competitive price.
- Military, space and commercial applications.
- Custom design available upon request.
- Guaranteed for one year standard.

RF Characteristics

Model Number	Freq. Range (MHz)	Insertion Loss Max(dB)	Isolation Min(dB)	VSWR Max	Forward Power(W)	Reverse Power(W)	Connector Type	Temp.(°C)
UIYBCI6466B56T86NF	56 ~ 86	1.5	16	1.4	60	30	N-F	+10 ~ +60
UIYBCI6466B56T86SF	56 ~ 86	1.5	16	1.4	60	30	SMA-F	+10 ~ +60

² List are specify frequency range and other ranges available.
² Please enter below information when inquiry and mark * is must.
* 1. The specific frequency range
* 2. Power handling (Forward, Reverse, Peak, etc.)
* 3. Connect type (SMA Male/ Female, N Male/ Female, etc.)
4. Other special request if have (Insertion Loss, Isolation, VSWR, Temperature, Dimension, etc.)

Mechanical Drawing

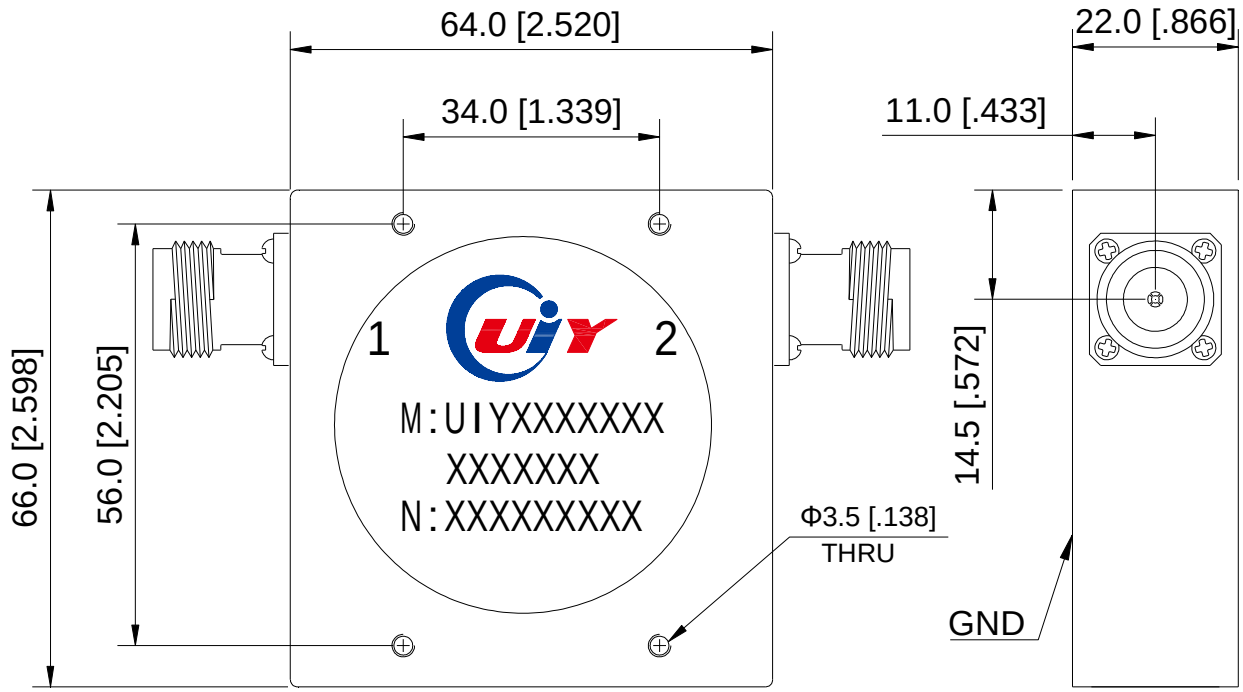

Unit: mm/ inch, General part tolerance is ±0.2mm unless otherwise stated.

Ver. 5

A2-5G, Zhujiang Plaza, Longxiang Blvd, Longgang District, Shenzhen 518172, China.
Tel: +86-755-25999990 25999909 Fax: +86-755-25999959 E-mail: sales@uiy.com Web: www.uiy.com