REVISIONS				
ZONE	REV	DESCRIPTION	DATE	APPROVED

MECHANICAL
CONTACT: BREAK BEFORE MAKE
ACTUATOR: FAILSAFE
SWITCHING SPEED: 20 mSEC MAX

ELECTRICAL
ACTUATOR VOLTAGE: 28.0 Vdc (22.0–32.0 Vdc)
ACTUATOR CURRENT: 0.250 A MAX @ 28.0 Vdc
POWER HANDLING: 200 WCW @ 1.0 GHz
IMPEDANCE: 50 OHMS

ENVIRONMENTAL
OPERATING TEMP: –54°C to +90°C
SINE VIBRATION: 30 G'S rms
LIFE : 1,000,000 CYCLES
RANDOM VIBRATION: 20 G'S rms

SPECIFICATION:

FREQUENCY RANGE (GHz):	DC–2.0	2.0–4.0	4.0–8.0	8.0–12.4	12.4–18.0
VSWR (Max.):	1.20:1	1.25:1	1.30:1	1.40:1	1.50:1
INSERTION LOSS (dB):	0.20	0.25	0.30	0.40	0.50
ISOLATION (dB):	90	80	80	70	60

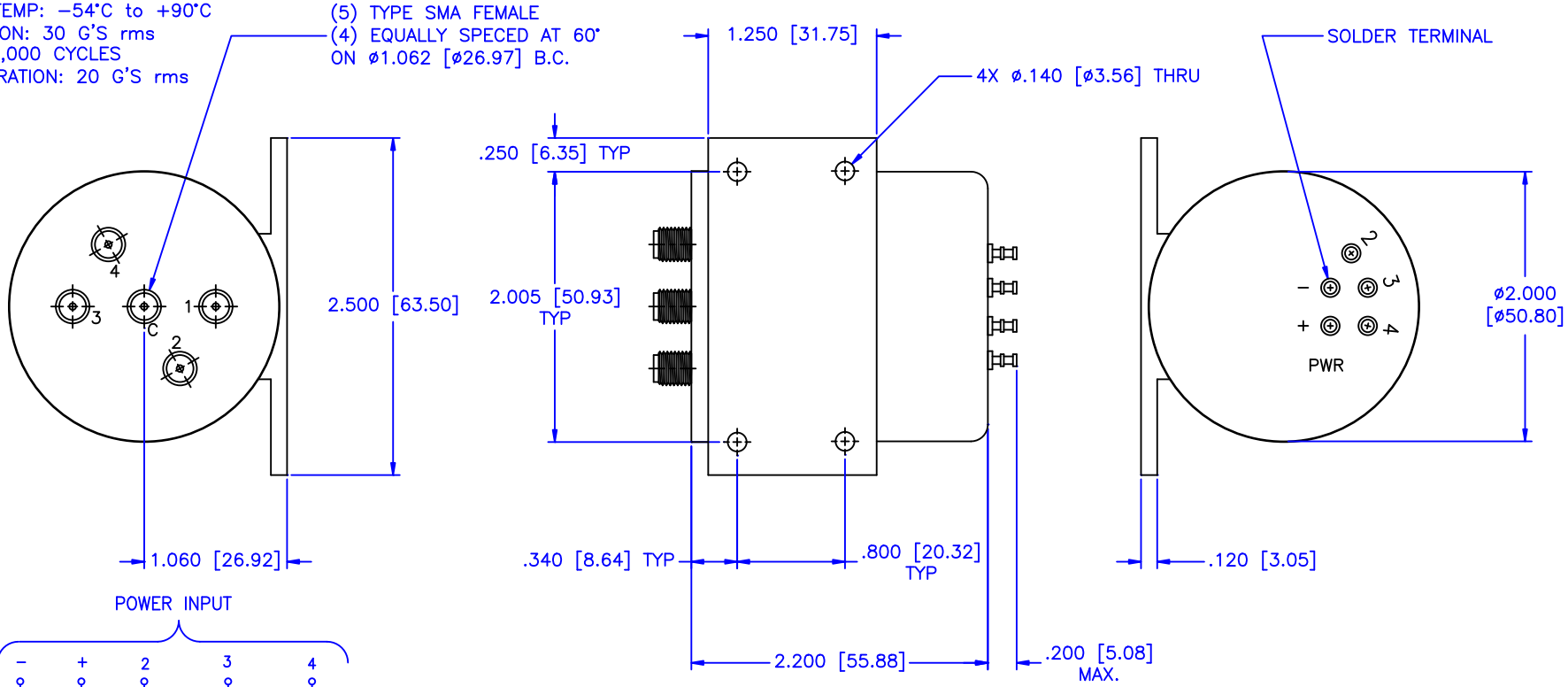

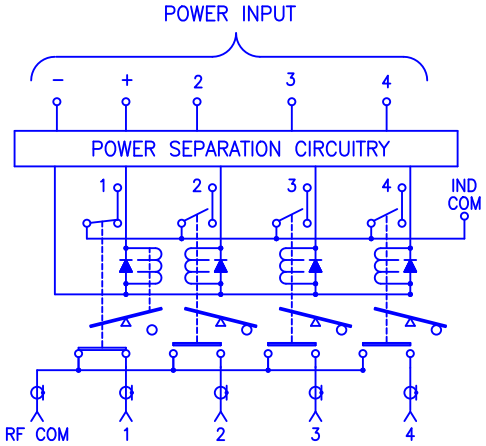

MATERIAL:

MCLI
MICROWAVE COMMUNICATIONS LABORATORIES INC.
7255 30TH AVE. N. SAINT PETERSBURG, FL 33710
TEL: (727) 344–6254 FAX: (727) 381–6116
hhtp://WWW.MCLI.COM

SCALE: N/A
SHEET: N/A

UNLESS OTHERWISE SPECIFIED:
TOLERANCES
IN (INCHES) OR [mm] (MILLIMETERS)
FRACTIONS: ± 1/64
DECIMALS: ±.01 ±.005
ANGLE: ±1/2°

DRAWING TITLE: ELECTROMECHANICAL SWITCHES

PART NO. E4–7–FIS

DRAWN: Paiboon Luekhamhan DATE: 02–25–2009

APPROVED: T. Nguyen DATE: 02–25–2009

PROPRIETARY NOTICE:
THE INFORMATION IN THIS DRAWING IS PROPRIETARY AND SHALL NOT BE USED OR DISCLOSED WITHOUT WRITTEN PERMISSION FROM MICROWAVE COMMUNICATIONS LABORATORIES INC. (MCLI)

THIRD ANGLE PROJECTION

CAGE CODE: 0D2L5
SIZE: N/A
REV: N/A
DO NOT SCALE THE DRAWING
DWG NO. 84198