REV.	DATE	ECR NO.	DESCRIPTION
NC	04/27/10	XXXXXX	INITIAL RELEASE

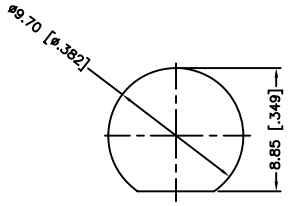

RECOMMENDED
MOUNTING HOLE

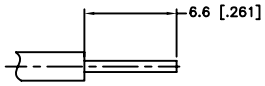

RECOMMENDED
CABLE STRIPPING DIM'S

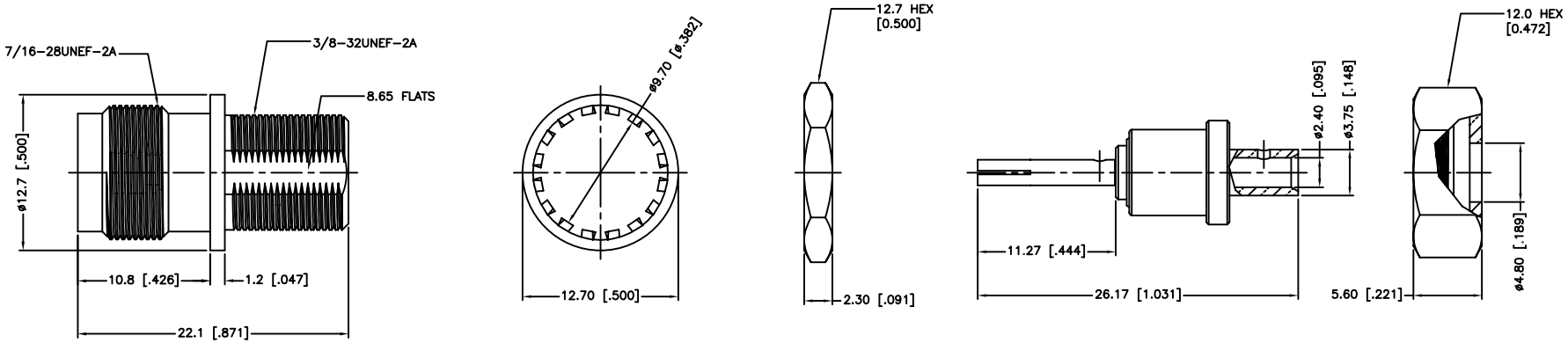

NOTES:
CONTACT PIN TO SOLDER
MAX.PANEL THICKNESS=4.0MM

	DESCRIPTION	MATERIAL	FINISH	QTY
8	HEX NUT	BRASS	NEXCOTE	1
7	BARREL	BRASS	GOLD	1
6	HEX NUT	BRASS	NEXCOTE	1
5	LOCK WASHER	BRASS	NEXCOTE	1
4	INSULATOR	PTFE	NATURAL	1
3	CONTACT PIN	PHOSPHOR BRONZE	GOLD	1
2	INSULATOR	PTFE	NATURAL	1
1	BODY	BRASS	NEXCOTE	1

UNLESS OTHERWISE SPECIFIED DIMENSIONS ARE IN MILLIMETERS. DIMENSIONS IN [ ] ARE IN INCHES AND FOR CUSTOMER REFERANCE ONLY.

UNLESS OTHERWISE SPECIFIED TOLERANCES FOR MILLIMETERS ARE:
0.5 – 8mm ± 0.20mm
8 – 30mm ± 0.40mm
30 – 120mm ± 0.50mm

UNLESS OTHERWISE SPECIFIED TOLERANCES FOR INCHES ARE:
.020 – .315 = ± 0.007"
.315 – 1.180 = ± 0.015"
1.180 – 4.724 = ± 0.020"

DO NOT SCALE DRAWING

APPROVALS		DATE
DRAWN	F.WANG	04/27/10
CHECKED		
ISSUED		
SHEET	1 OF 1	

CAD FILE C:/CONNEX/122469–10.DWG

Amphenol Connex

PART DESCRIPTION
TNC Bulkhead Direct Solder Jack
(.085 Semi Rigid Cable)

PART NO. 122469–10

DWG. NO. 122469–10.DWG | REV. NC | SIZE A | SCALE NA