AHC ATTENUATORS
SMA

6 GHz
2 WATTS

MODELS: AHC

SPECIFICATIONS:

Electrical:

Frequency Range ____ DC – 6.0 GHz
Standard dB Values __ 0 – 10, 12, 15, 20, 30 & 40 dB
Attenuation Accuracy:
- 0 – 10 dB ____ ±0.5 dB
- 12, 15, 20 dB ____ ±0.7 dB
- 30 dB ____ ±0.9 dB
- 40 dB ____ ±1.5 dB

VSWR ____ 1.20:1 Max.
Input Power ____ 2 Watts Avg. @ 25°C
Derated Linearly to 1.1 Watts at +85°C
Impedance ____ 50 Ohms
Operating Temp Range ____ –20°C to +85°C

Mechanical:

SMA Connectors ____ Passivated Stainless Steel
Mates with MIL–STD–348
Conductors ____ Gold Plated Beryllium Copper

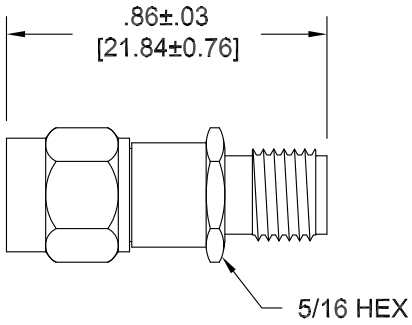

0-12, 15 & 20dB

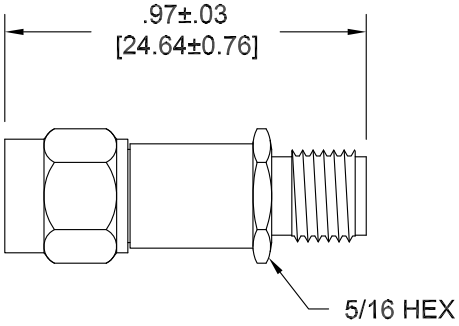

30 & 40dB

HOW TO ORDER:

Model Number: AHC-XX
└ dB Value

Ordering Examples:

Model Number: AHC-3
DC – 6 GHz; 3 dB; SMA – Male/Fem

Model Number: AHC-10
DC – 6 GHz; 10 dB; SMA – Male/Fem

Note: Dimensions in Brackets are Expressed in Millimeters and are for Reference Only.
Design specifications are subject to change without notice.
Contact factory for technical specifications before purchasing or use.

300 Dino Drive • Ann Arbor, MI 48103–9457 U.S.A. • 888–244–6638 or 734–426–5553 • FAX 734–426–5557 • inmet.apitech.com