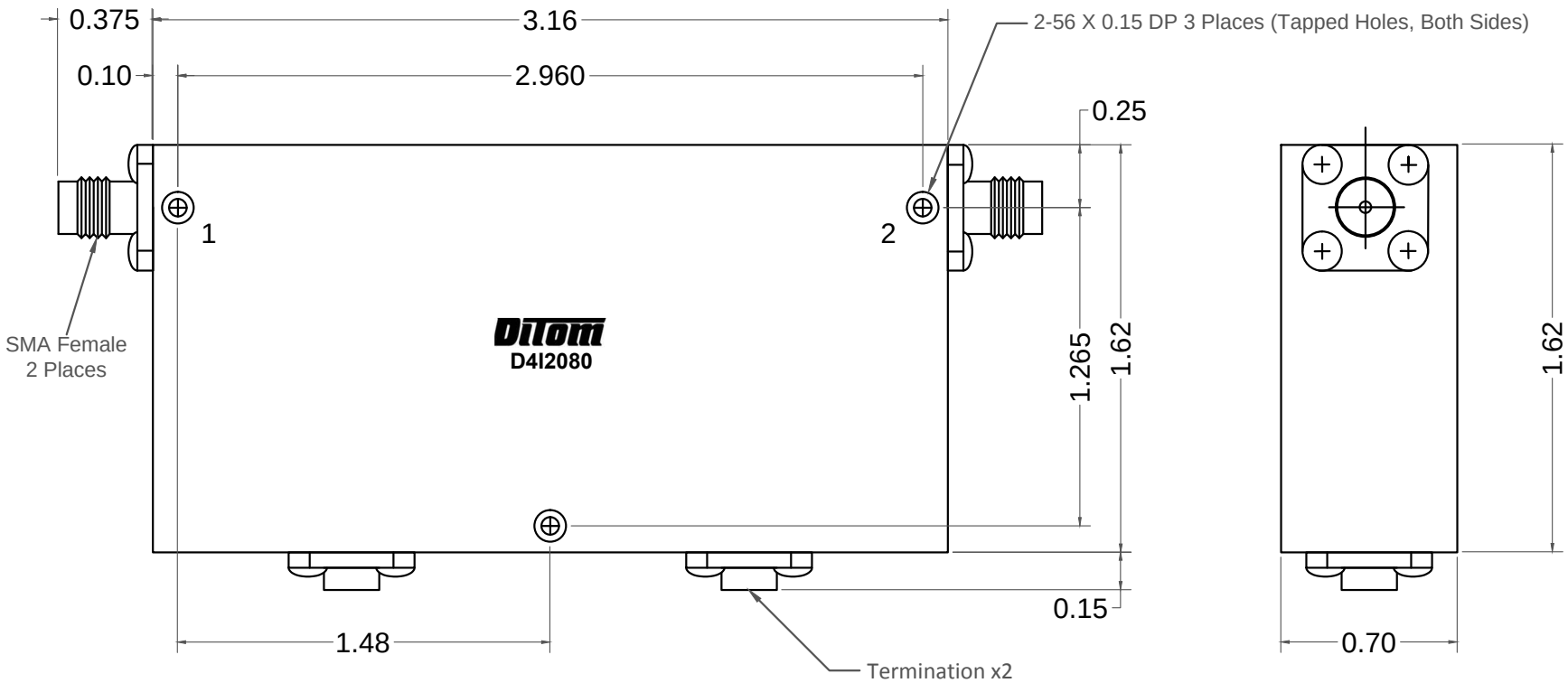

ELECTRICAL SPECIFICATIONS

FREQUENCY RANGE (GHz):	2.00 - 8.00	
ISOLATION (dB):	18	MIN
INSERTION LOSS (dB):	3.75	MAX
VSWR:	2.25	MAX
POWER: AVG (PORT 1 TO 2):	20W	
REFLECTIVE POWER (TERM):	2W	
PEAK:	20W	

MECHANICAL SPECIFICATIONS

CONNECTORS:	SMA-FEMALE, STAINLESS STEEL, PASSIVATE
CONTACT PINS:	BERYLLIUM COPPER, GOLD PLATE
OPERATING TEMPERATURE:	-10° to +65°C
WEIGHT (APPROX):	6.9 OUNCES

DIMENSIONS IN INCHES, UNLESS OTHERWISE SPECIFIED	DiTom MICROWAVE INC. Fresno, California, USA
TOLERANCE XX±0.03 XXX±0.010	TITLE 2.00 - 8.00 GHz Isolator
SCALE 3:1	MODEL NO D4I2080 REV