MECHANICAL CHARACTERISTICS

INTERFACE	MIL-STD-348, FIGURE 326-1
IN ACCORDANCE WITH THE INTENT OF SLANT SHEET	DSCC 94007 & 94008 REF.
FORCE TO ENGAGE (FULL, LIMITED, SMOOTH)	15.0, 10.0, 2.0 LBS. MAX.
FORCE TO DISENGAGE (FULL, LIMITED, SMOOTH)	5.0, 2.0, 0.5 LBS. MIN.
AXIAL CONTACT RETENTION (FROM INTERFACE)	3.0 LBS. MIN.
AXIAL CONTACT RETENTION (FROM CABLE)	3.0 LBS. MIN.
AXIAL TRAVEL	.100 IN MIN.
SPRING FORCE (.040 CONNECTOR DEFLECTION)	2.0 LBS. MIN. TO 3.5 LBS. MAX
SPRING FORCE (.100 CONNECTOR DEFLECTION)	4.0 LBS. MIN. TO 5.5 LBS. MAX
SPRING PRELOAD FORCE	1.4 LBS NOM.
RADIAL FLOAT	.025 MIN. IN ANY DIRECTION
CABLE RETENTION	20 LBS. MIN.
DURABILITY (FULL, LIMITED, SMOOTH)	100, 500, 1000 CYCLES MIN.
AXIAL HOUSING RETENTION FORCE	30 LBS MIN.
MASS	2.11 GRAMS NOM.

ELECTRICAL CHARACTERISTICS

IMPEDANCE	50 Ohms NOM.
MAXIMUM FREQUENCY	18 GHz
VSWR DC - 12 GHz	1.12:1 MAX.
12 - 18 Ghz	1.35:1 MAX.
INSERTION LOSS	0.04 √F (GHz)dB MAX.
DIELECTRIC WITHSTANDING VOLTAGE	500 Vrms MIN.
INSULATION RESISTANCE	5000 MegaOhms MIN.
RF LEAKAGE DC - 3 GHz	-80 dB MIN.
3 - 18 GHz	-65 dB MIN.
CORONA	190 Vrms MIN. @ 70,000 FEET
RF HIGH POTENTIAL	325 Vrms MIN.
CONTACT RESISTANCE (INNER)	6.0 MilliOhms MAX.
CONTACT RESISTANCE (OUTER)	2.0 MilliOhms MAX.

ENVIRONMENTAL CHARACTERISTICS

OPERATING TEMPERATURE	-65°C TO 165°C
VIBRATION	MIL-STD-202, METHOD 204, CONDITION D
MECHANICAL SHOCK	MIL-STD-202, METHOD 213, CONDITION I
THERMAL SHOCK	MIL-STD-202, METHOD 107, CONDITION B
MOISTURE RESISTANCE	MIL-STD-202, METHOD 106, EXCEPT STEP 7B
CORROSION	MIL-STD-202, METHOD 101, CONDITION B, 5%

MATERIALS AND FINISH

BODY, CONTACT, EMI SHIELD RINGS & RETAINING RING	BERYLLIUM COPPER, PER ASTM-B-196, GOLD PLATED PER MIL-DTL-45204, OVER NICKEL PLATE PER AMS-QQ-N-290
INSULATOR	POLYPHENYLENE SULFIDE (PPS), PER ASTM-D-6358
DIELECTRIC STOP	POLYETHERIMIDE THERMOPLASTIC PER ASTM-D-5205
SHROUD, BUSHING, SPRING CAP & ANTI- ROCK SLEEVE	STEEL CORROSION RESISTANT, CONDITION A, NON-MAGNETIC, UNS S30300 PER ASTM-A-582, PASSIVATE PER ASTM-A-967.
SPRING	STEEL, CORROSION RESISTANT, NON-MAGNETIC, 17-7 PH SS COND. C (CH-900) PER AMS 5678, PASSIVATED PER ASTM-A-967

APPLICATION

CABLE(S)	UT-85-LL
INSTALLATION	PER CONFIGURATOR

THIS DRAWING IS PROPRIETARY AND CONFIDENTIAL.

REV.	DESCRIPTION	DATE	BY	APPVD
A	INITIAL RELEASE RDCR_67014	4/13/06	JMK	MJK
A1	ECO 65194	4/25/06	MJK	MJK
A2	ECO 75759	1/3/2008	MJM	MJR
B	ECO 105567	7/30/2010	CCF	RS
C	ECO 106101	12/3/2010	MJM	RS
C1	ECO 115151	3/14/2011	MJM	RS

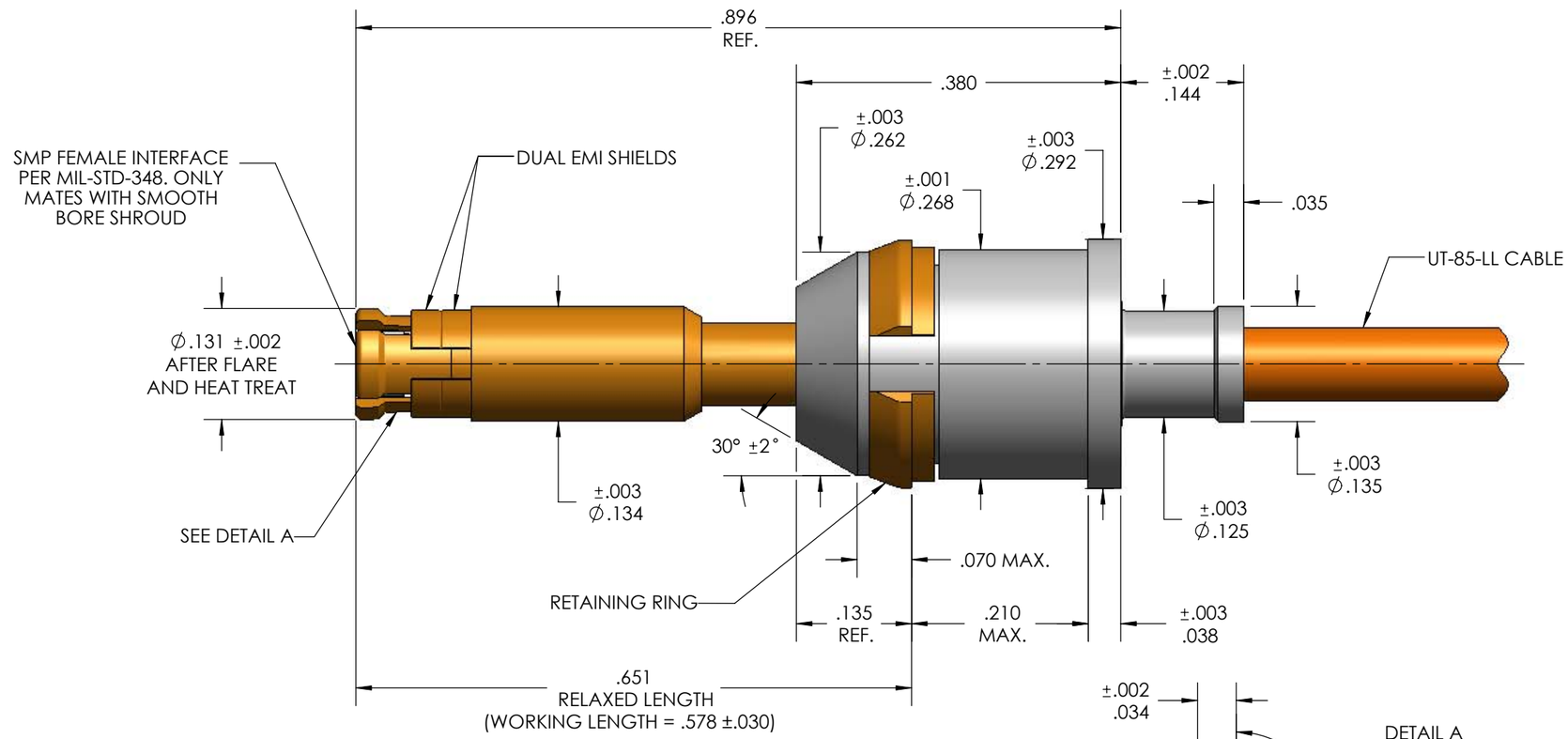

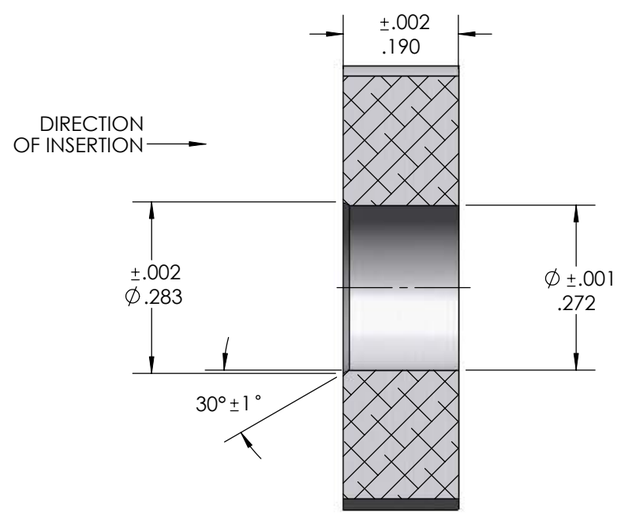

MOUNTING HOLE DETAIL
SCALE 4:1

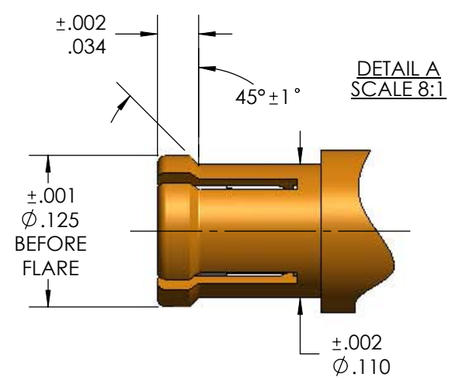

SPECIFICATION DRAWING

THIS SPECIFICATION IS THE PROPERTY OF MICRO-COAX, INC. AND MAY NOT BE USED OR COPIED WITHOUT THE EXPRESS WRITTEN PERMISSION OF MICRO-COAX, INC.

	INITIALS	DATE
DWN.	JMK	1/31/06
CHKD.	CCF	12/6/10
APPVD.		

MICRO-COAX®
Leading the way in transmission line solutions.
Copyright Micro-Coax, Inc.

TOLERANCES UNLESS OTHEWISE SPECIFIED	
.XX	± .02
.XXX	± .005
.XXXX	± .0010
ANGLES	± 2°

TITLE: SMP SOCKET, FLOAT MOUNT, UT-85-LL

ALL DIMENSIONS IN INCHES UNLESS OTHERWISE SPECIFIED. SCREW THDS. TO BE IN ACCORD WITH ANSI B1.1-1989.

FSCM NO.	SIZE	SCALE	SHEET NO.	DRAWING NO.	REV
64639	B	6:1	1 OF 1	SD903641	C1