Circulators/Isolators
SMD

CU Series CU1S2702

SHAPES AND DIMENSIONS

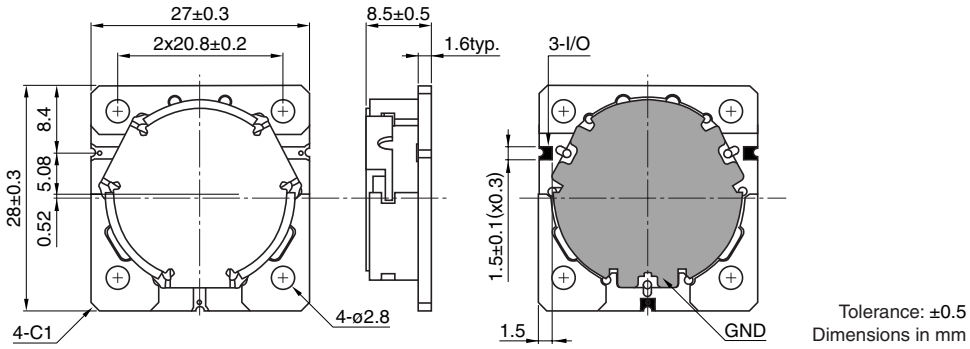

Tolerance: ±0.5
Dimensions in mm

RECOMMENDED PC BOARD PATTERNS

LAND

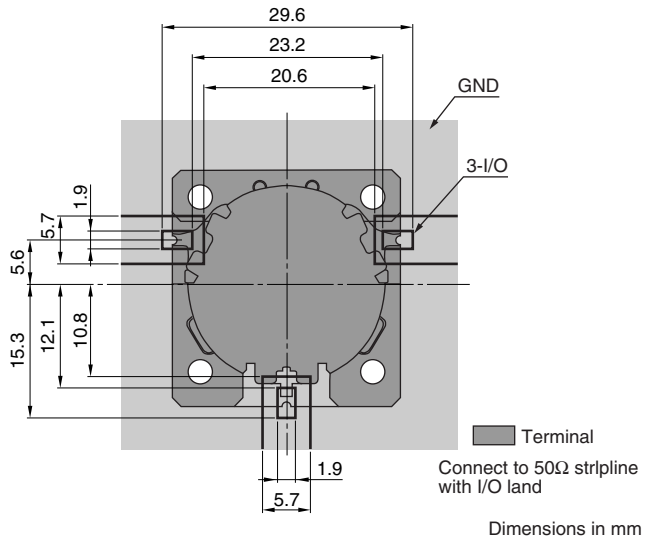

Dimensions in mm

SOLDER RESIST

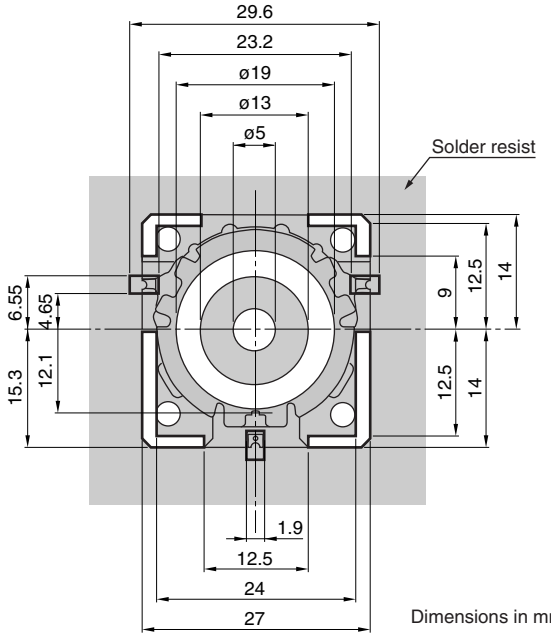

Dimensions in mm

ELECTRICAL CHARACTERISTICS

CU1S2702□*1C-□*2 (27x27mm SMD Circulator)

*1 Direction CW-'A' or CCW-'B'
*2 Center frequency
Other frequencies available on your request.

Use	Frequency range (MHz)	Center frequency (MHz)	Isolation (dB) min.	Insertion loss (dB) max.	VSWR max.	Handling power (W)max.	Capacity of built-in resistor (W)	Temperature range (°C)	Weight (g)
Cellular	869 to 894	881.5							
GSM	925 to 960	942.5							
DCS	1805 to 1880	1842.5							
PCS	1930 to 1990	1960	18	0.5	1.25	50 (Ave.)	—	–20 to +85	22
TD-SCDMA	2010 to 2025	2017.5							
WCDMA	2110 to 2170	2140							
WiMAX	2300 to 2400	2350							

* Bottom surface to be kept below +85°C.

• All specifications are subject to change without notice.