HIGH POWER CAVITY DUPLEXER
TX:439.5-459.5MHz
RX:2215-2225MHz

- Compact size and high power handle
- Very high rejection outdoor unit
- Compatible with ITU Standard
- N-Female and SMA-F connector available upon request
- Storage temperature -40~+85C
- Operational Temperature: -25~+70C
- Operating Humidity: 0~90% relative

Electrical Specification

Frequency Range:	TX:439.5-459.5MHz RX:2215-2225MHz
Insertion Loss:	RX: 0.5dB max TX: 0.5dB max
Pass band Ripple:	0.4dB maximum
Power Handle:	50W
Isolation between port:	60dB
Return loss:	18dB

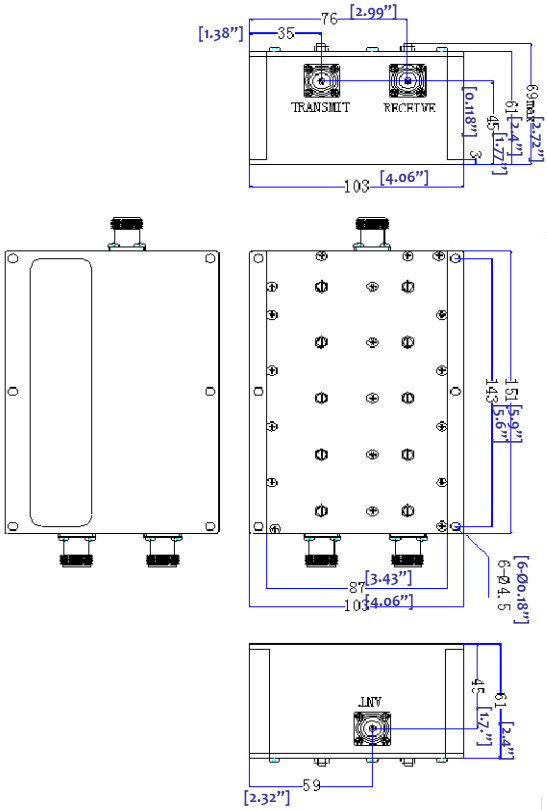

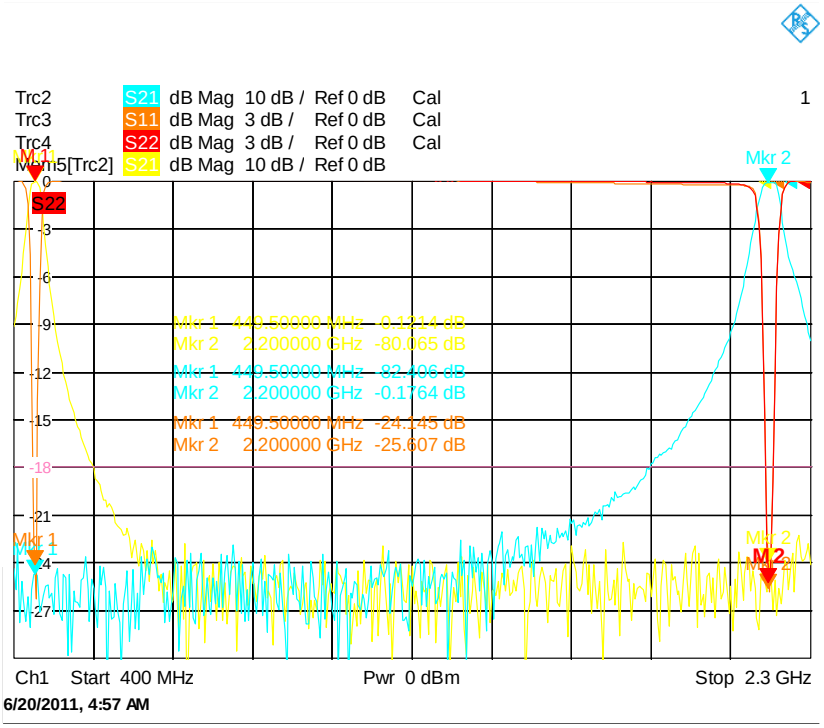

HIGH POWER CAVITY DUPLEXER 439.5-459.5MHZ & 2215-2225MHZ