REVISIONS				
ZONE	REV	DESCRIPTION	DATE	APPROVED

MECHANICAL
CONTACT: BREAK BEFORE MAKE
ACTUATOR: LATCHING
SWITCHING SPEED: 20 mSEC MAX

ELECTRICAL
ACTUATOR VOLTAGE: 28.0±3.0 Vdc
ACTUATOR CURRENT: 0.350 A MAX @ 28.0 Vdc
POWER HANDLING: 350 WCW @ 1.0 GHz
IMPEDANCE: 50 OHMS

ENVIRONMENTAL
OPERATING TEMP: −54°C to +90°C
SINE VIBRATION: 30 G'S rms
LIFE : 1,000,000 CYCLES
RANDOM VIBRATION: 20 G'S rms

SPECIFICATION:

FREQUENCY RANGE (GHz):	DC−2.0
VSWR (Max.):	1.20:1
INSERTION LOSS (dB):	0.20
ISOLATION (dB):	90

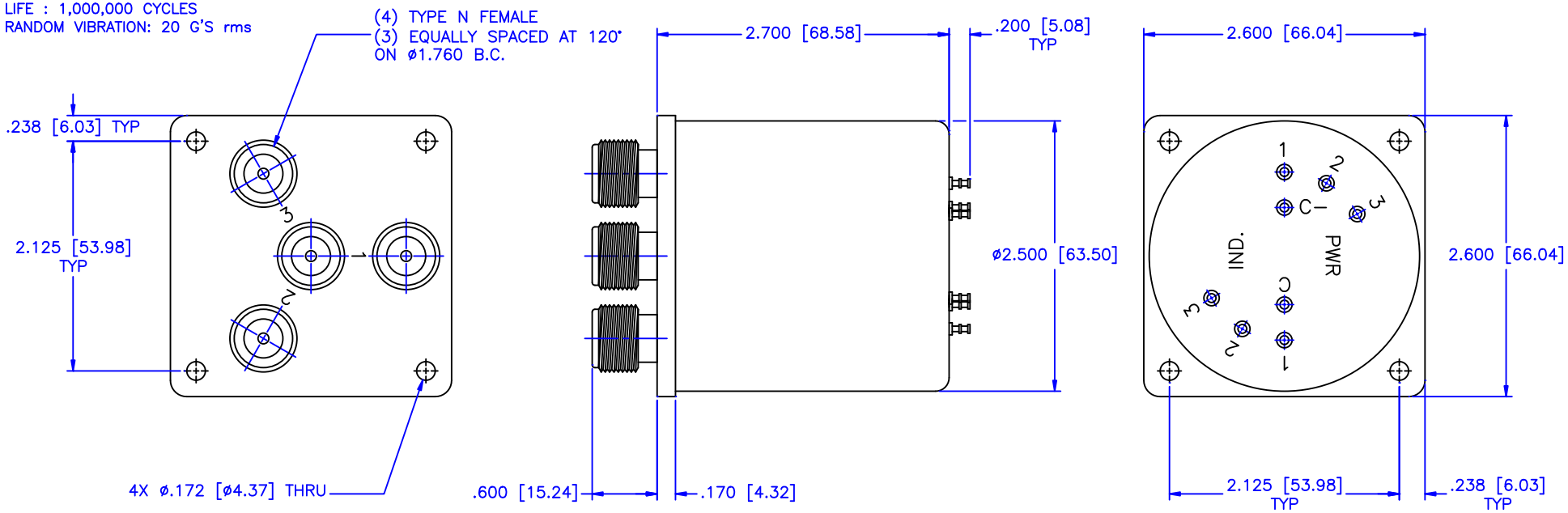

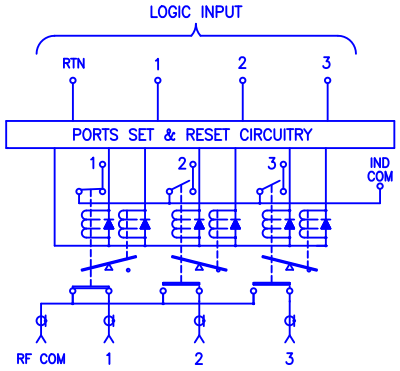

MATERIAL:		MCLI — MICROWAVE COMMUNICATIONS LABORATORIES INC. 7255 30TH AVE. N. SAINT PETERSBURG, FL 33710 TEL: (727) 344−6254 FAX: (727) 381−6116 hhtp://WWW.MCLI.COM	SCALE: N/A
			SHEET: N/A
		UNLESS OTHERWISE SPECIFIED: TOLERANCES IN (INCHES) OR [mm] (MILLIMETERS) FRACTIONS: ± 1/64 DECIMALS: ±.01 ±.005 ANGLE: ±1/2°	DRAWING TITLE: ELECTROMECHANICAL SWITCHES
			PART NO. D3−2−LIS
DRAWN: Paiboon Luekhamhan	DATE: 03−02−2009	PROPRIETARY NOTICE: THE INFORMATION IN THIS DRAWING IS PROPRIETARY AND SHALL NOT BE USED OR DISCLOSED WITHOUT WRITTEN PERMISSION FROM MICROWAVE COMMUNICATIONS LABORATORIES INC. (MCLI)	CAGE CODE: 0D2L5 / SIZE: N/A / REV: B / DWG NO. 84253
APPROVED: T. Nguyen	DATE: 03−02−2009	THIRD ANGLE PROJECTION	DO NOT SCALE THE DRAWING